USER MANUAL

• 15P0072B1 •
Inverters

SERIES N

Emission 17/11/05 R.00

English

- This manual is integrant and essential to the product. Carefully read the instructions contained herein as they provide important hints for use and maintenance safety.
- This device is to be used only for the purposes it has been designed to. Other uses should be considered improper and dangerous. The manufacturer is not responsible for possible damages caused by improper, erroneous and irrational uses.
- Walther Flender Antriebstechnik GmbH is responsible for the device in its original setting.
- Any changes to the structure or operating cycle of the device must be performed or authorized by the Engineering Department of Walter Flender Antriebstechnik GmbH.
- Walther Flender Antriebstechnik GmbH assumes no responsibility for the consequences resulting by the use of non-original spare-parts.
- Walther Flender Antriebstechnik GmbH reserves the right to make any technical changes to this manual and to the device without prior notice. If printing errors or similar are detected, the corrections will be included in the new releases of the manual.
- Walther Flender Antriebstechnik GmbH is responsible for the information contained in the original version of the German manual.
- The information contained herein is the property of Walther Flender Antriebstechnik GmbH and cannot be reproduced. Walther Flender Antriebstechnik GmbH enforces its rights on the drawings and catalogues according to the law.

WALTHER FLENDER®
ANTRIEBSTECHNIK

Walther Flender Antriebstechnik GmbH

Schwarzer Weg 100-107, D- 40593 Düsseldorf

Tel. +49 (0)211 7007 00 - Fax +49 (0)211 7007 227

e-mail: info@walther-flender.de - web: www.walther-flender.de

Thank you for purchasing Walther Flender Antriebstechnik GmbH Variable Frequency SERIES N's!

SAFETY INSTRUCTIONS

- Always follow safety instructions to prevent accidents and potential hazards from occurring.
- In this manual, safety messages are classified as follows:

WARNING Improper operation may result in serious personal injury or death.

CAUTION Improper operation may result in slight to medium personal injury or property damage.

- Throughout this manual we use the following two illustrations to make you aware of safety considerations:

Identifies potential hazards under certain conditions.
Read the message and follow the instructions carefully.

Identifies shock hazards under certain conditions.
Particular attention should be directed because dangerous voltage may be present.

- Keep operating instructions handy for quick reference.
- Read this manual carefully to maximize the performance of SERIES N series inverter and ensure its safe use.

WARNING

- **Do not remove the cover while power is applied or the unit is in operation.**
  Otherwise, electric shock could occur.
- **Do not run the inverter with the front cover removed.**
  Otherwise, you may get an electric shock due to high voltage terminals or charged capacitor exposure.
- **Do not remove the cover except for periodic inspections or wiring, even if the input power is not applied.**
  Otherwise, you may access the charged circuits and get an electric shock.
- **Wiring and periodic inspections should be performed at least 10 minutes after disconnecting the input power and after checking the DC link voltage is discharged with a meter (below DC 30V).**
  Otherwise, you may get an electric shock.
- **Operate the switches with dry hands.**
  Otherwise, you may get an electric shock.
- **Do not use the cable when its insulating tube is damaged.**
  Otherwise, you may get an electric shock.
- **Do not subject the cables to scratches, excessive stress, heavy loads or pinching.**
  Otherwise, you may get an electric shock.

⚠ CAUTION

- **Install the inverter on a non-flammable surface. Do not place flammable material nearby.**
  Otherwise, fire could occur.
- **Disconnect the input power if the inverter gets damaged.**
  Otherwise, it could result in a secondary accident and fire.
- **After the input power is applied or removed, the inverter will remain hot for a couple of minutes.**
  Otherwise, you may get bodily injuries such as skin-burn or damage.
- **Do not apply power to a damaged inverter or to an inverter with parts missing even if the installation is complete.**
  Otherwise, electric shock could occur.
- **Do not allow lint, paper, wood chips, dust, metallic chips or other foreign matter into the SERIES N.**
  Otherwise, fire or accident could occur.

OPERATING PRECAUTIONS

(1) Handling and installation

- ☐ Handle according to the weight of the product.
- ☐ Do not stack the inverter boxes higher than the number recommended.
- ☐ Install according to instructions specified in this manual.
- ☐ Do not open the cover during delivery.
- ☐ Do not place heavy items on the inverter.
- ☐ Check the inverter mounting orientation is correct.
- ☐ Do not drop the inverter, or subject it to impact.
- ☐ Use the Type 3 grounding method for 200 V Class (Ground impedance: Below 100 ohm).
- ☐ Take protective measures against ESD (Electrostatic Discharge) before touching the pcb for inspection or installation.
- ☐ Use the inverter under the following environmental conditions:

Environment	Ambient temperature	- 10 ~ 50 ℃ (non-freezing)
	Relative humidity	90% RH or less (non-condensing)
	Storage temperature	- 20 ~ 65 ℃
	Location	Protected from corrosive gas, combustible gas, oil mist or dust
	Altitude, Vibration	Max. 1,000m above sea level, Max. 5.9m/sec^2 (0.6G) or less

(2) Wiring

- ☐ Do not connect a power factor correction capacitor, surge suppressor, or RFI filter to the output of the inverter.
- ☐ The connection orientation of the output cables U, V, W to the motor will affect the direction of rotation of the motor.
- ☐ Incorrect terminal wiring could result in the equipment damage.
- ☐ Reversing the polarity (+/-) of the terminals could damage the inverter.
- ☐ Only authorized personnel familiar with Walther Flender Antriebstechnik GmbH inverter should perform wiring and inspections.
- ☐ Always install the inverter before wiring. Otherwise, you may get an electric shock or have bodily injury.

(3) Trial run

- ☐ Check all parameters prior to operation. Changing parameter values might be required depending on the load.
- ☐ Always apply permissible range of voltage to the each terminal as indicated in this manual. Otherwise, it could lead to inverter damage.

(4) Operation precautions

- ☐ When the Auto restart function is selected, stay away from the equipment as a motor will restart suddenly after a fault stop.
- ☐ The Stop key on the keypad is valid only when the appropriate function setting has been made. Prepare an emergency stop switch separately.
- ☐ If a fault reset is made with the reference signal present, a sudden start will occur. Check that the reference signal is turned off in advance. Otherwise an accident could occur.
- ☐ Do not modify or alter anything inside the inverter.
- ☐ Motor might not be protected by electronic thermal function of inverter.
- ☐ Do not use a magnetic contactor on the inverter input for frequent starting/stopping of the inverter.
- ☐ Use a noise filter to reduce the effect of electromagnetic interference. Otherwise nearby electronic equipment may be affected.
- ☐ In case of input voltage unbalance, install AC reactor. Power Factor capacitors and generators may become overheated and damaged due to potential high frequency noise transmitted from inverter.
- ☐ Before operating unit and prior to user programming, reset user parameters to default settings.
- ☐ Inverter can easily be set to high-speed operations. Verify capability of motor or machinery prior to operating unit.
- ☐ Stopping torque is not produced when using the DC-Break function. Install separate equipment when stopping torque is needed.

(5) Fault prevention precautions

- ☐ Provide a safety backup such as an emergency brake which will prevent the machine and equipment from hazardous conditions if the inverter fails.

(6) Maintenance, inspection and parts replacement

- ☐ Do not conduct a megger (insulation resistance) test on the control circuit of the inverter.
- ☐ Refer to Chapter 13 for periodic inspection (parts replacement).

(7) Disposal

- ☐ Handle the inverter as an industrial waste when disposing of it.

(8) General instructions

- ☐ Many of the diagrams and drawings in this instruction manual show the inverter without a circuit breaker, a cover or partially open. Never run the inverter like this. Always place the cover with circuit breakers and follow this instruction manual when operating the inverter.

Important User Information

- The purpose of this manual is to provide the user with the necessary information to install, program, start up and maintain the SERIES N series inverter.
- To assure successful installation and operation, the material presented must be thoroughly read and understood before proceeding.
- This manual contains…

Chapter	Title	Description
1	Basic information & precautions	Provides general information and precautions for safe and optimum use of the SERIES N series inverter.
2	Installation	Provides instructions on how to install the SERIES N inverter.
3	Wiring	Provides instructions on how to wire the SERIES N inverter.
4	Basic configuration	Describes how to connect the optional peripheral devices to the inverter.
5	Programming keypad	Illustrates keypad features and display.
6	Basic operation	Provides instructions for quick start of the inverter.
7	Function list	Outlines the parameter information of the SERIES N such as description, type, units, factory defaults, minimum/maximum setting.
8	Control block diagram	Shows control flow to help users easily understand operation mode.
9	Basic functions	Provides information for basic functions in the SERIES N
10	Advanced functions	Indicates advanced functions used for system application.
11	Monitoring	Gives information on the operating status and fault information.
12	Protective functions	Outlines protective functions of the SERIES N.
13	Troubleshooting & maintenance	Defines the various inverter faults and the appropriate action to take as well as general troubleshooting information.
14	Specifications	Gives information on Input/Output rating, control type and more details of the SERIES N inverter.

Table of Contents

1 Basic information and precautions 1-1

1.1 Important precautions 1-1
1.2 Product Details 1-2
1.3 Removal and reinstallation 1-3

2 Installation 2-1

2.1 Installation precautions 2-1
2.2 Dimensions 2-3

3 Wiring 3-1

3.1 Terminal wiring 3-1
3.2 Specifications for power terminal block wiring 3-2
3.3 I/O terminal block specification 3-4
3.4 PNP/NPN selection 3-5

4 Basic configuration 4-1

4.1 Connection of peripheral devices to the inverter 4-1
4.2 MCCB, Earth leakage circuit breaker and Magnetic contactor specification 4-2
4.3 Input fuse 4-2

5 Programming Keypad 5-1

5.1 Keypad features 5-1
5.2 Alpha-numeric view on the LED keypad 5-2
5.3 Moving to other groups 5-3
5.4 How to change the codes in a group 5-5
5.5 Parameter setting method 5-7
5.6 Monitoring of operation status 5-10
5.7 Parameter initialize 5-13

6 Basic operation 6-1

6.1 Frequency Setting and Basic Operation 6-1

7 Function list 7-1

7.1 Drive Group 7-1
7.2 Function group 1 7-3
7.3 Function group 2 7-8

7.4 I/O group 7-18

8 Control block diagram 8-1

8.1 Frequency and Drive mode setting 8-2
8.2 Accel/Decel setting and V/F control 8-3

9 Basic Functions 9-1

9.1 Frequency mode 9-1
9.2 Multi-Step frequency setting 9-6
9.3 Run Command setting 9-7
9.4 Accel/Decel time and unit setting 9-10
9.5 V/F control 9-15
9.6 Stop mode select 9-18
9.7 Frequency limit setting 9-19

10 Advanced functions 10-1

10.1 DC brake 10-1
10.2 Jog operation 10-3
10.3 Up-Down operation 10-4
10.4 3-Wire Operation 10-4
10.5 Dwell operation 10-5
10.6 Slip compensation 10-6
10.7 PID Control 10-8
10.8 Auto tuning 10-10
10.9 Sensorless vector control 10-11
10.10 Energy-saving operation 10-12
10.11 Speed Search 10-12
10.12 Auto restart try 10-15
10.13 Carrier frequency select 10-16
10.14 Second motor operation 10-16
10.15 Parameter initialize & Lock 10-17

11 Monitoring 11-1

11.1 Operating status monitoring 11-1
11.2 Monitoring the I/O terminal 11-3
11.3 Monitoring fault condition 11-4
11.4 Analog Output 11-5
11.5 Multi-function output terminal (MO) and Relay (30AC) 11-6

12 Protective functions 12-1

12.1 Electronic Thermal 12-1
12.2 Overload Warning and trip 12-2
12.3 Stall prevention 12-3
12.4 Output phase loss protection 12-5
12.5 External trip signal 12-5
12.6 Inverter Overload 12-6
12.7 Frequency command loss 12-7

13 Troubleshooting & Maintenance 13-1

13.1 Protective functions 13-1
13.2 Fault Remedy 13-3
13.3 Precautions for maintenance and inspection 13-5
13.4 Check points 13-5
13.5 Part replacements 13-5

14 Specifications 14-1

14.1 Technical data 14-1
14.2 Temperature Derating Information 14-3

MODBUS RTU ..... Appendix 1
EC DECLARATION OF CONFORMITY
MANUFACTURER'S DECLARATION

NOTES:

1 Basic information and precautions

1.1 Important precautions

Unpacking and inspection

- Inspect the inverter for any damage that may have occurred during shipping. To verify the inverter unit is the correct one for the application you need, check the inverter type, output ratings on the nameplate and the inverter is intact.

SERIES N	WALTHER FLENDER® ANTRIEBSTECHNIK
Modell	SERIES N
Bezeichnung	ZZ0072024
Eingang	AC1PH 200-230V 50/60Hz 16A
Ausgang	AC3PH 0 – InputV 0 – 400Hz 8A 3,0kVA
Motor	2,5HP/1,8kW
	Feld für Bar Code und Seriennummer

← Model
← Code
← Input Power Ratings
← Output Power Ratings
← Motor Power
← Bar code/Serial number

SERIES N 0001 2S X B K 2

Walthet Flender inverter	Motor rating		Input power		Brake		Filter		Keypad		Enclosure	
		kW										
	0001	0,4	2S	1phase 200-230Vac	X	X= excluded	B	B= *domestic filter included - I= excluded	K	K= included	2	2= IP20
	0002	0,75-1,1	2S		X		B		K		2	
	0003	1,5-1,8	2S		X		B		K		2	
	0005	2,2-3	2S		X		B		K		2	

* Integrated input filter EN 61800-3 edition 2 FIRST ENVIRONMENT Category C1, EN55011 gr.1 cl. B for industrial and domestic utility, EN50081-1, -2, EN50082-1, -2, EN61800-3-A11.

- Accessories

If you have found any discrepancy, damage, etc., contact your sales representative.

Preparations of instruments and parts required for operation

Instruments and parts to be prepared depend on how the inverter is operated. Prepare equipment and parts as necessary.

Installation

To operate the inverter with high performance for a long time, install the inverter in a proper place in the correct direction and with proper clearances (Refer to 2. Installation, P 2-1).

Wiring

Connect the power supply, motor and operation signals (control signals) to the terminal block. Note that incorrect connection may damage the inverter and peripheral devices (Refer to 3. Wiring, P 3-1).

1.2 Product Details

Appearance

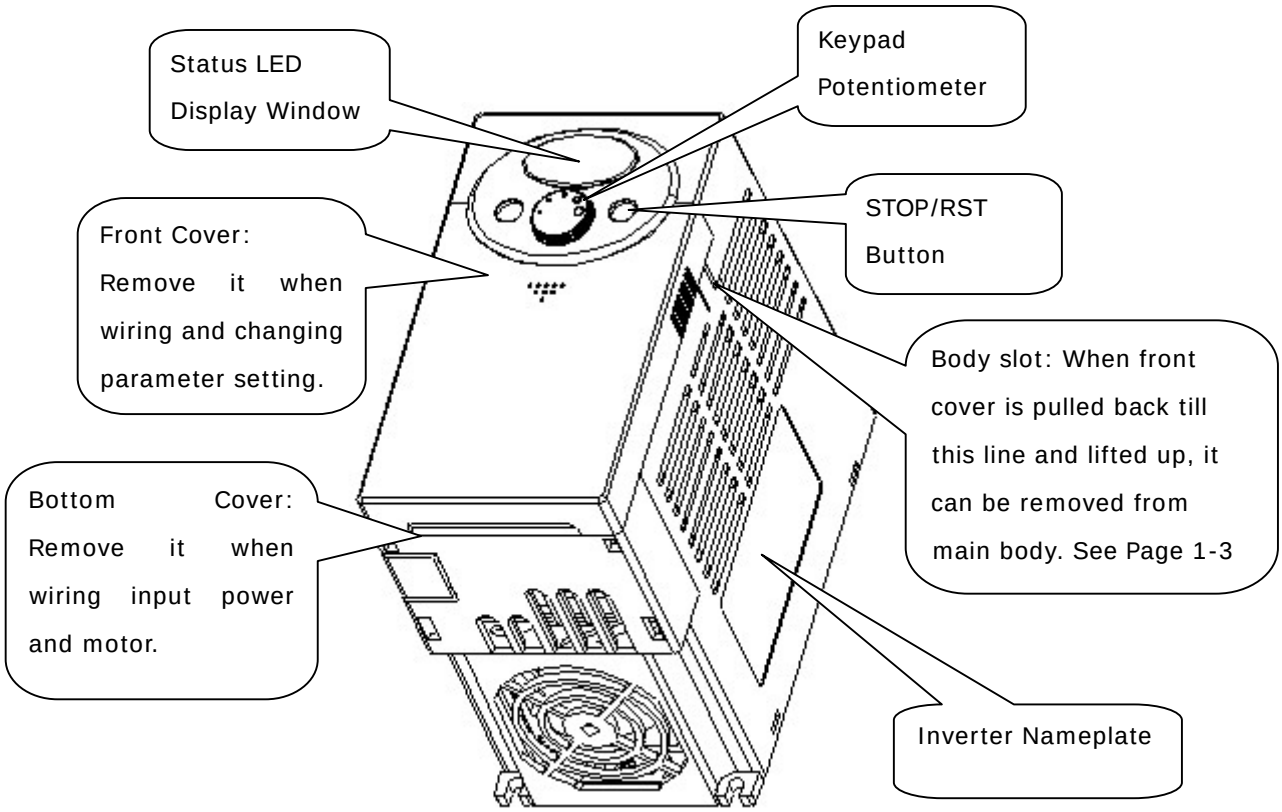

View without the front cover

Refer to Page 1-3 for front cover removal.

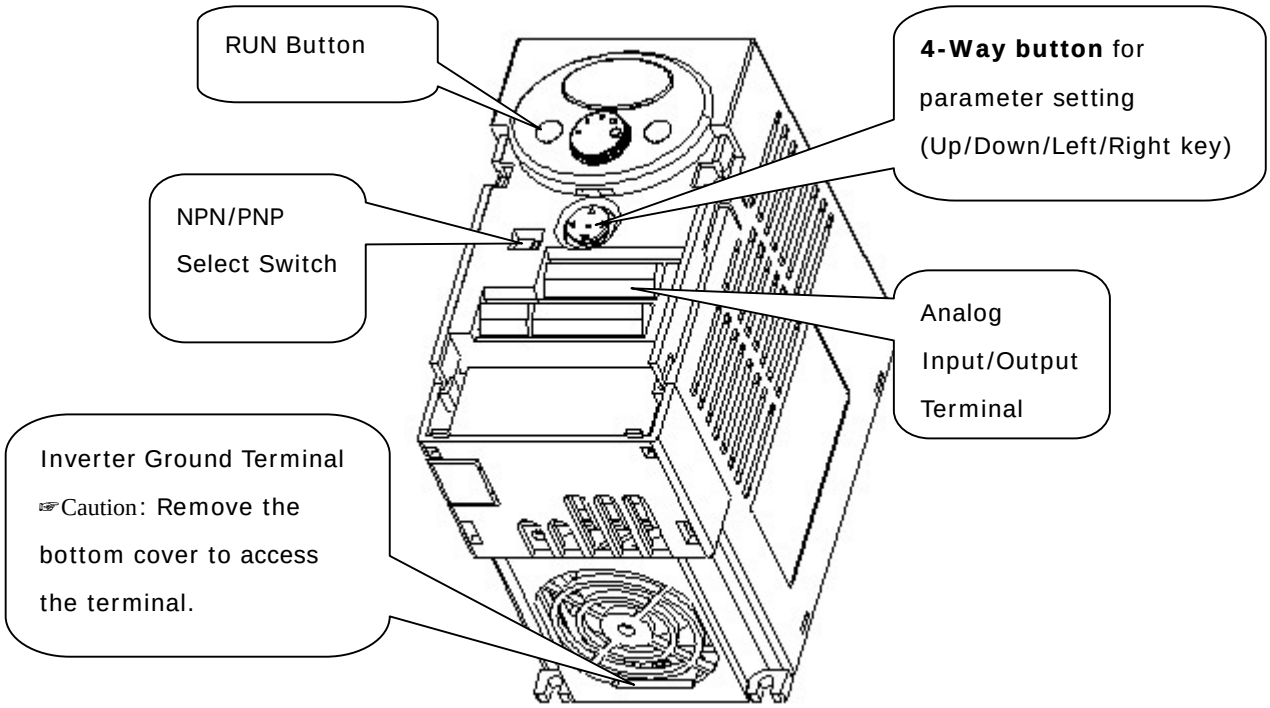

1.3 Removal and reinstallation

Removal of the front cover

To change parameter setting: Press the pattern with a finger slightly as 1) and push it downward as 2). Then 4-way button will appear. Use this button for parameter setting and changing the value.

1)

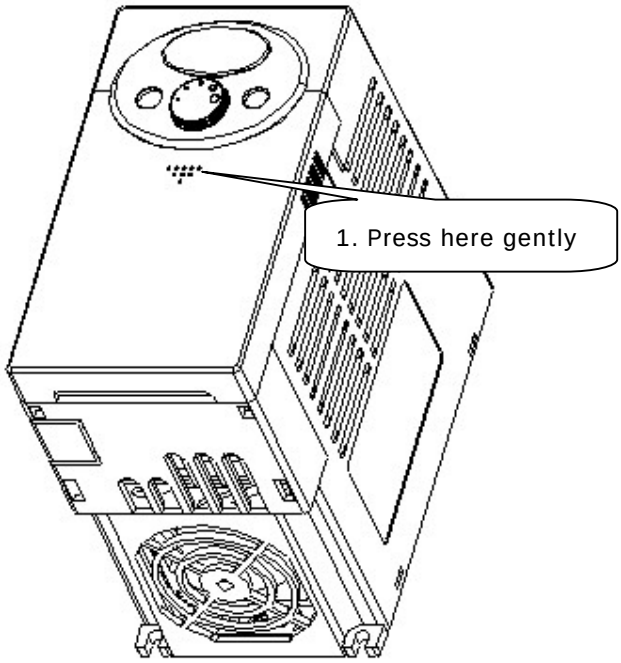

2)

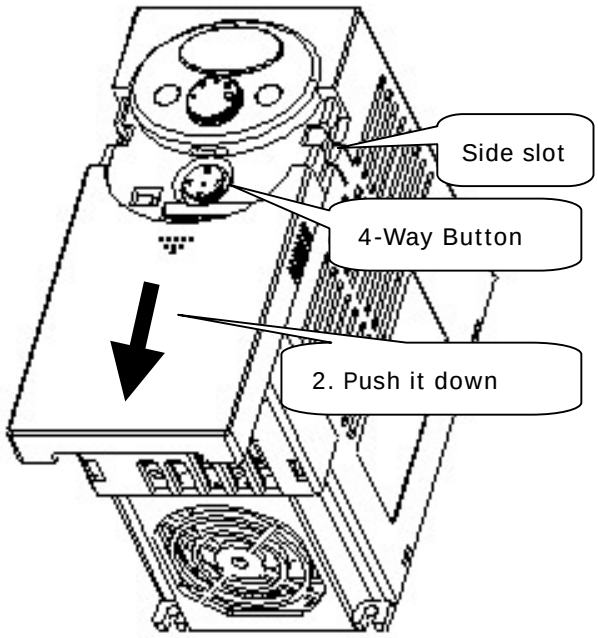

Removal for wiring: The method is the same as shown in 1. Hold both sides of the cover and lift upward to completely remove from the main body.

1)

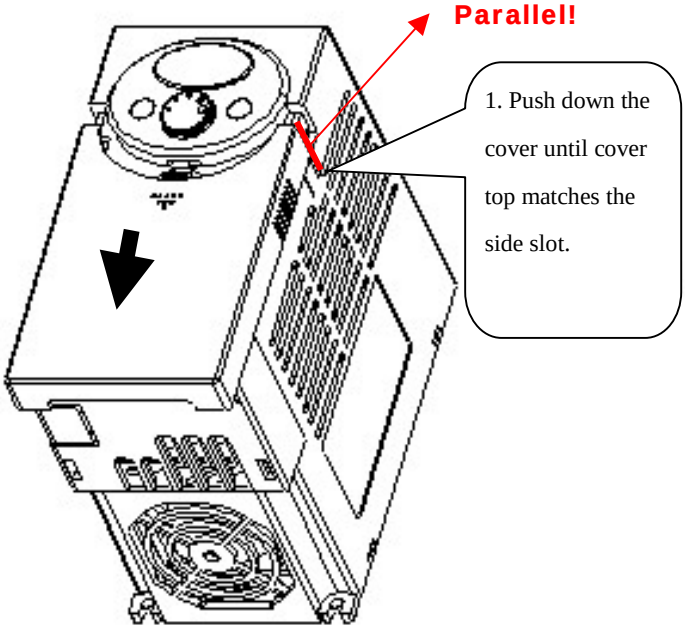

2)

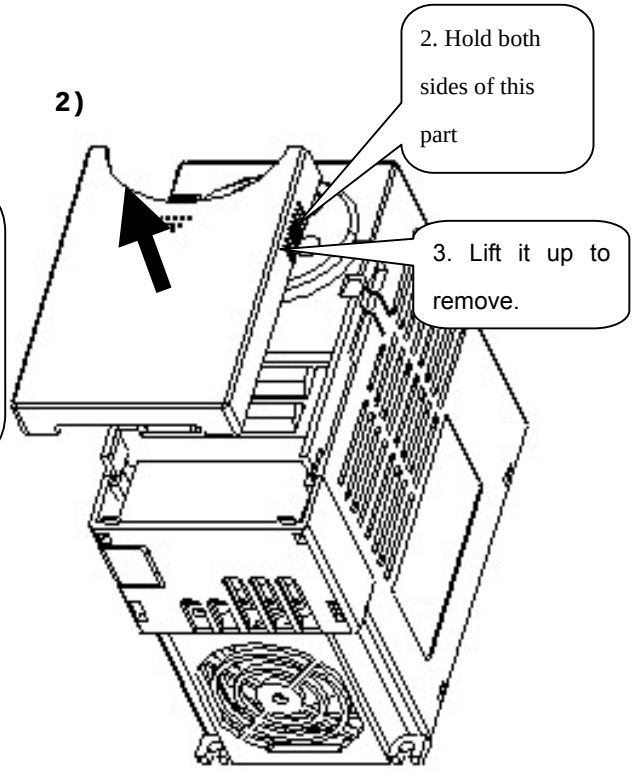

WALTHER FLENDER®
ANTRIEBSTECHNIK

Removal for wiring input power and terminals: After removing the front cover, lift the bottom cover up to disconnect.

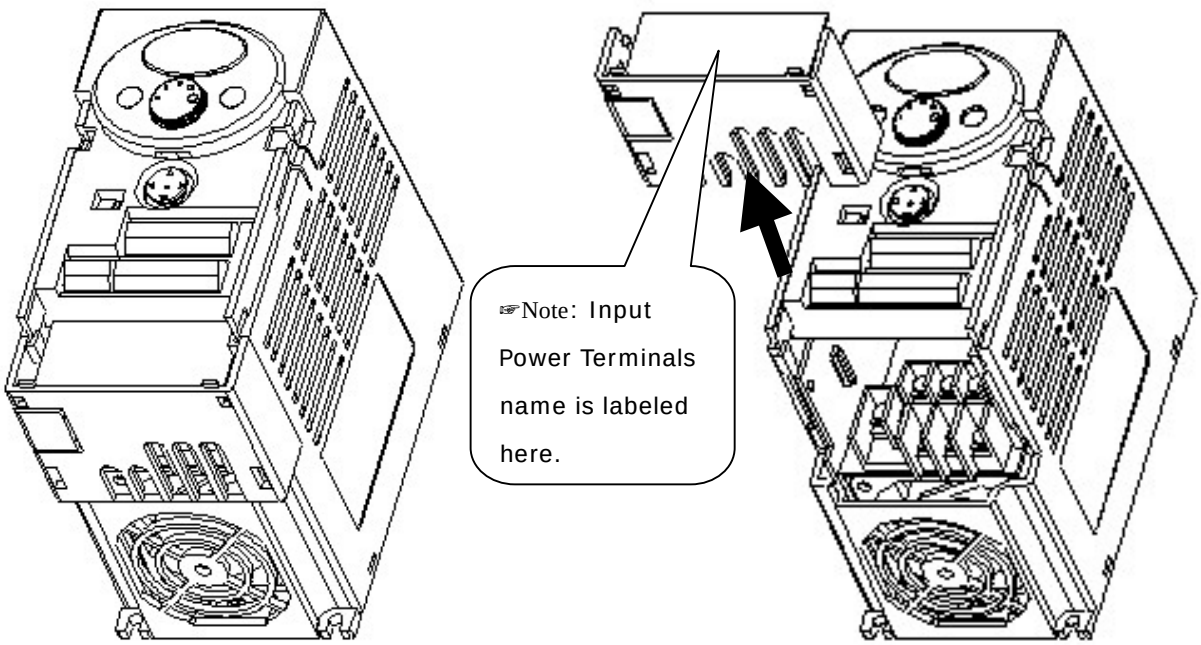

To access control terminals: after finishing power terminal wiring, reinstall the bottom cover and then start wiring control terminals.

☞Note : Use the recommended size of the cable as indicated in this manual ONLY. Using larger size cable may lead to mis-wiring or damage the insulation.

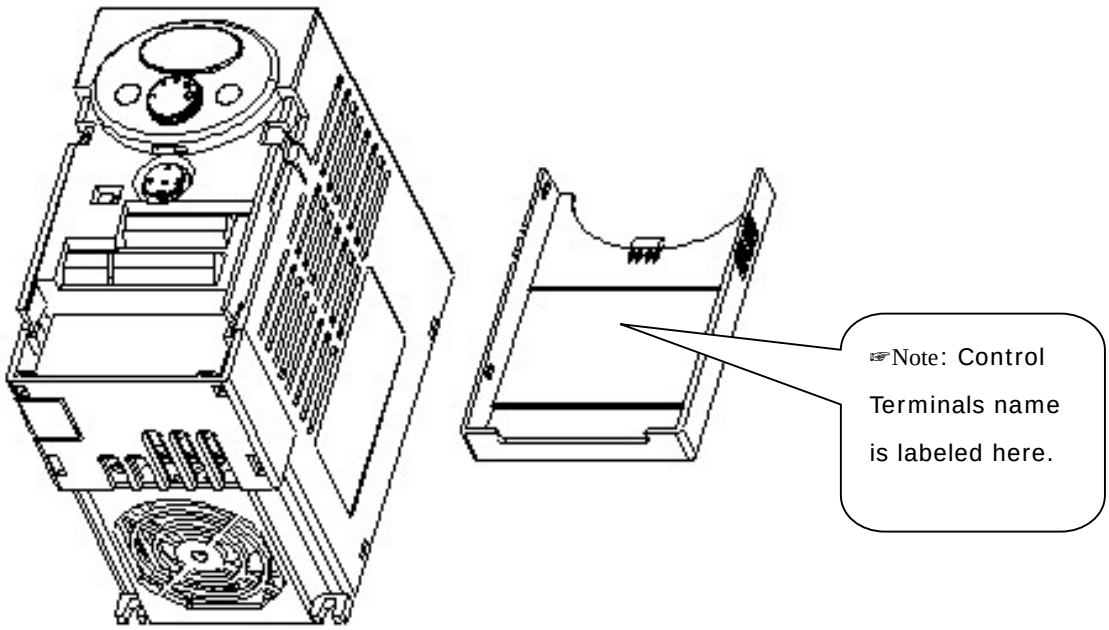

2 Installation

2.1 Installation precautions

CAUTION

- Handle the inverter with care to prevent damage to the plastic components. Do not hold the inverter by the front cover. It may fall off.
- Install the inverter in a place where it is immune to vibration (5.9 m/s^2 or less).
- The inverter is under great influence of ambient temperature. Install in a location where temperature is within the **permissible range (-10~50°C)**.

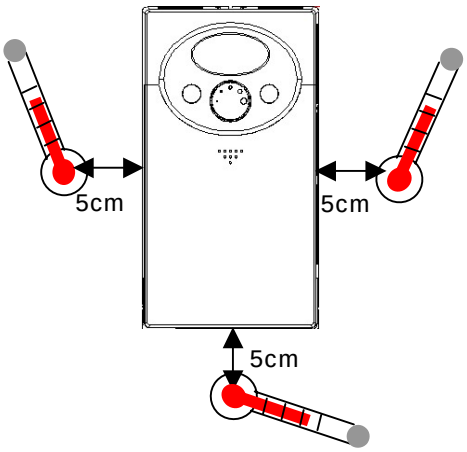

<Ambient Temp Checking Location>

- The inverter will be very hot during operation. Install it on a non-combustible surface.
- Mount the inverter on a flat, vertical and level surface. Inverter orientation must be vertical (top up) for proper heat dissipation. Also leave sufficient clearances around the inverter.

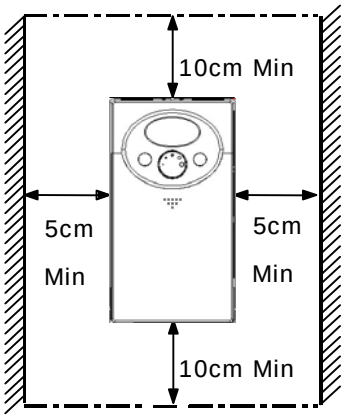

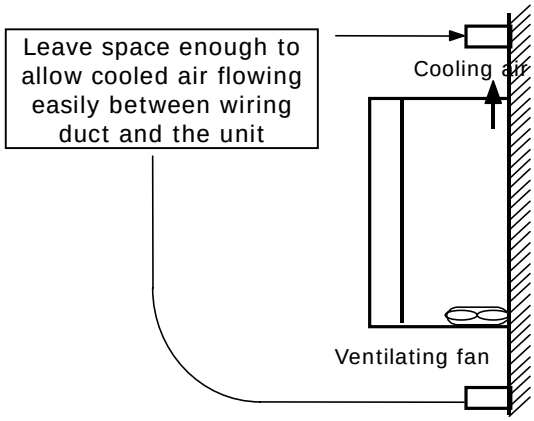

- Protect from moisture and direct sunlight.
- Do not install the inverter in any environment where it is exposed to waterdrops, oil mist, dust, etc. Install the inverter in a clean place or inside a “totally enclosed” panel which does not accept any suspended matter.

WALTHER FLENDER®
ANTRIEBSTECHNIK

- When two or more inverters are installed or a ventilation fan is mounted in inverter panel, the inverters and ventilation fan must be installed in proper positions with extreme care taken to keep the ambient temperature of the inverters below the permissible value. If they are installed in improper positions, the ambient temperature of the inverters will rise and ventilation effect will be reduced.

- Install the inverter using screws or bolts to insure the inverter is firmly fastened.

< For installing multiple inverters in panel>

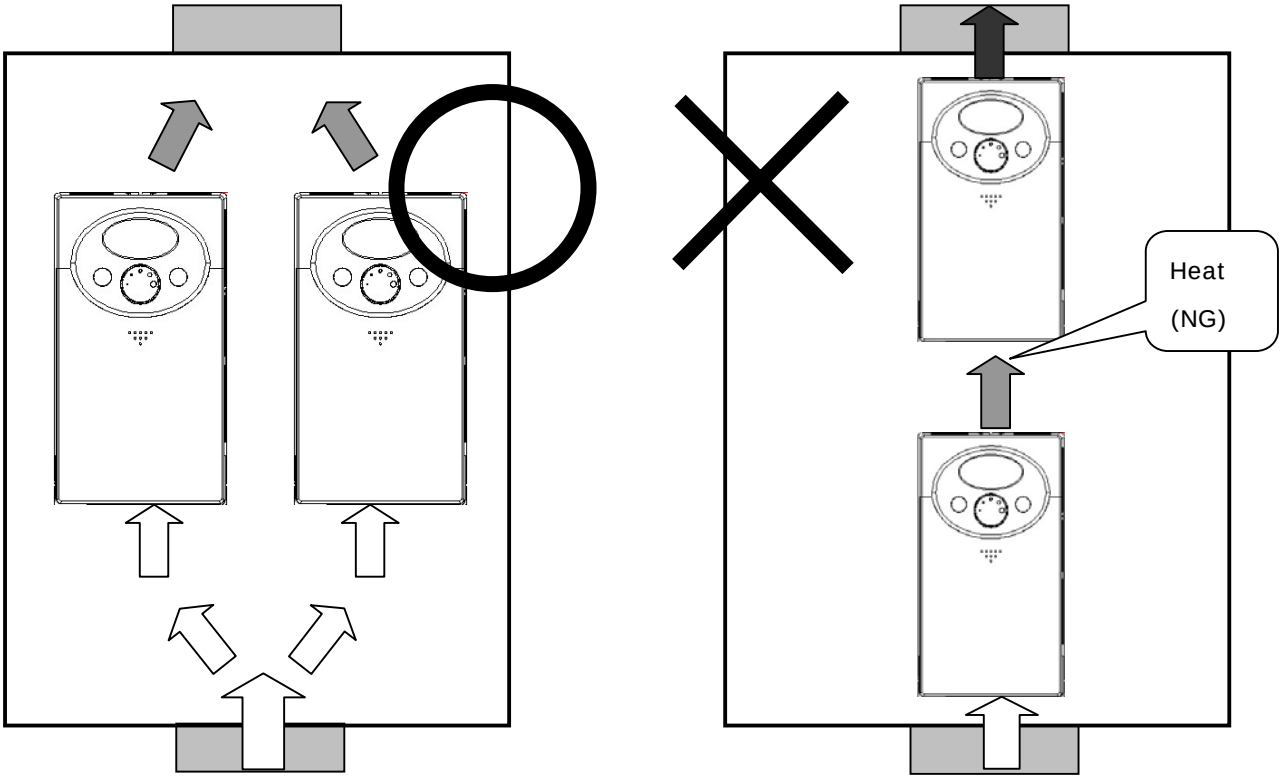

☞ Note : Take caution on proper heat ventillation when installing inverters and fan in a panel.

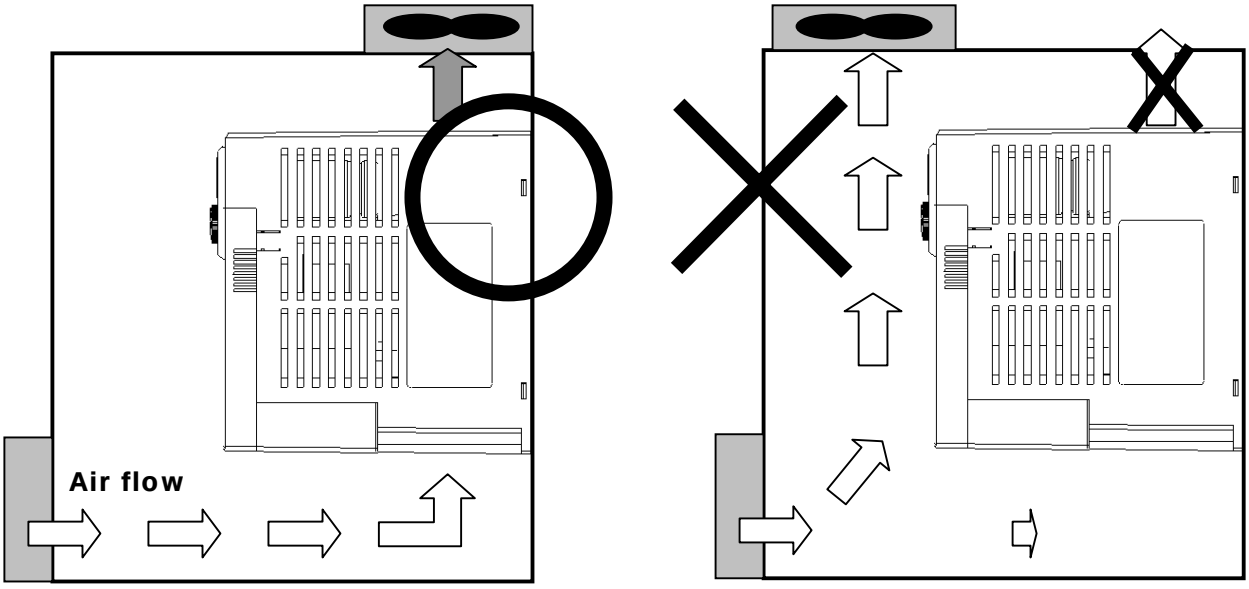

2.2 Dimensions

0.4, 1.1 kW (0.95~1.9kVA)

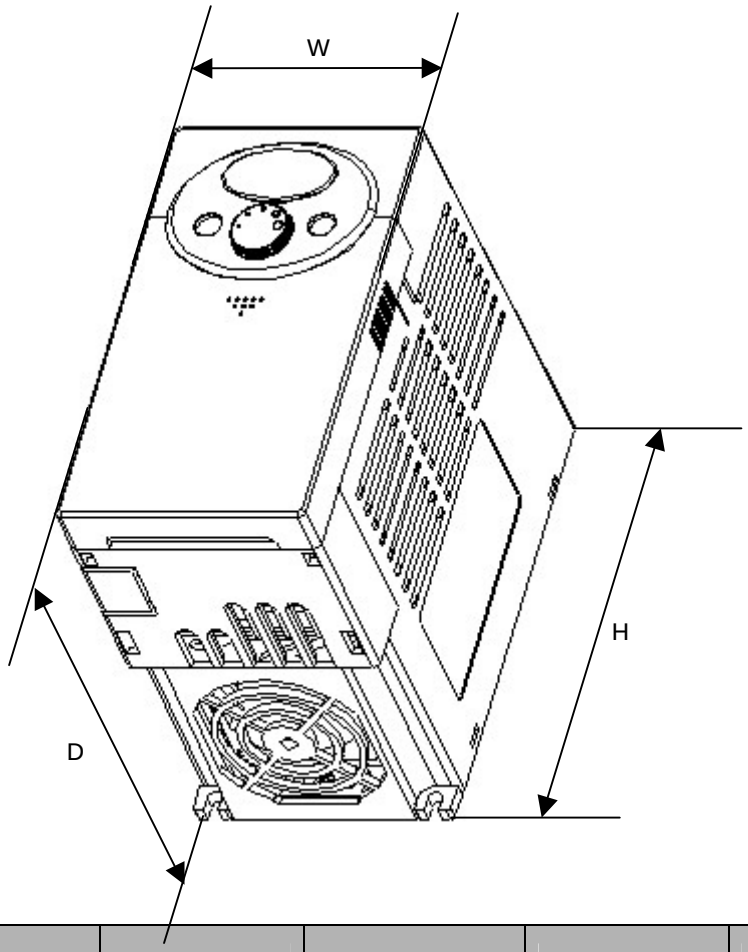

Dimensions	SERIES N 2S 0001 XIK2	SERIES N 2S 0001 XBK2	SERIES N 2S 0002 XIK2	SERIES N 2S 0002 XBK2
W	79	79	79	79
H	143	143	143	143
D	143	143	143	143
Weight (Kg)	0.87	0.95	0.89	0.97

1.5, 3 kW (3~4.5kVA)

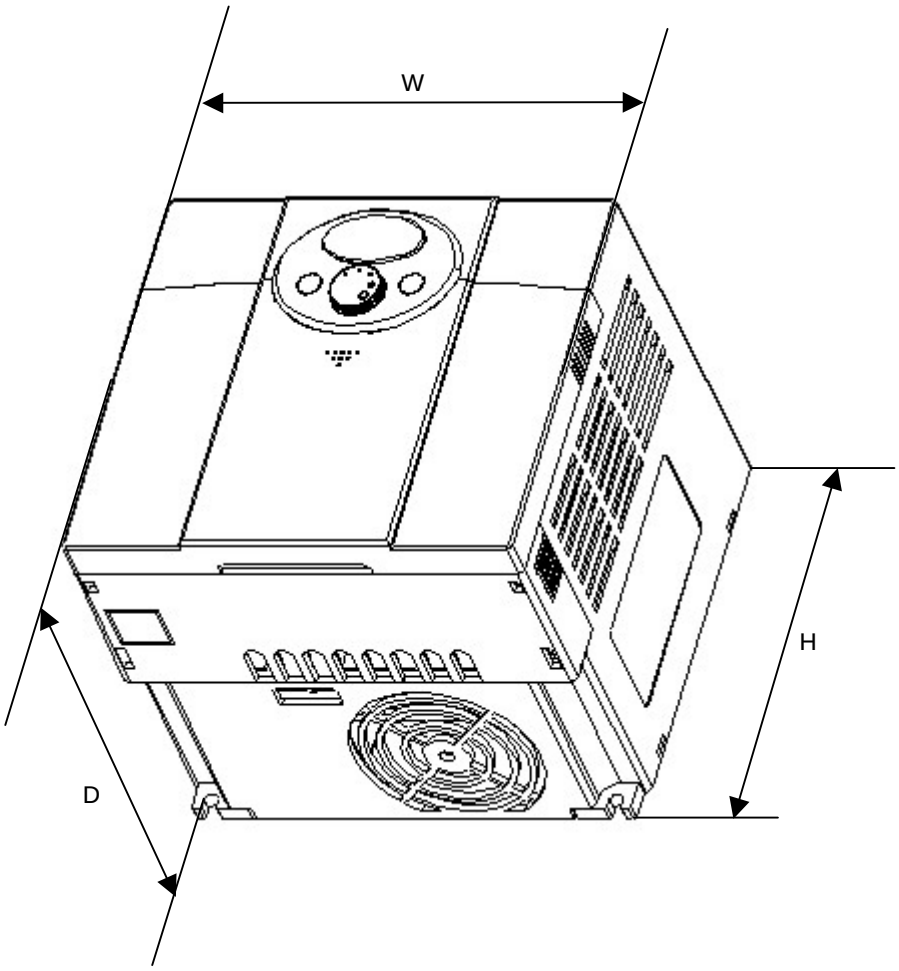

Dimensions	SERIES N 2S 0003 XIK2	SERIES N 2S 0003 XBK2	SERIES N 2S 0005 XIK2	SERIES N 2S 0005 XBK2
W	156	156	156	156
H	143	143	143	143
D	143	143	143	143
Weight (Kg)	1.79	1.94	1.85	2

WALTHER FLENDER®
ANTRIEBSTECHNIK

3 Wiring

3.1 Terminal wiring

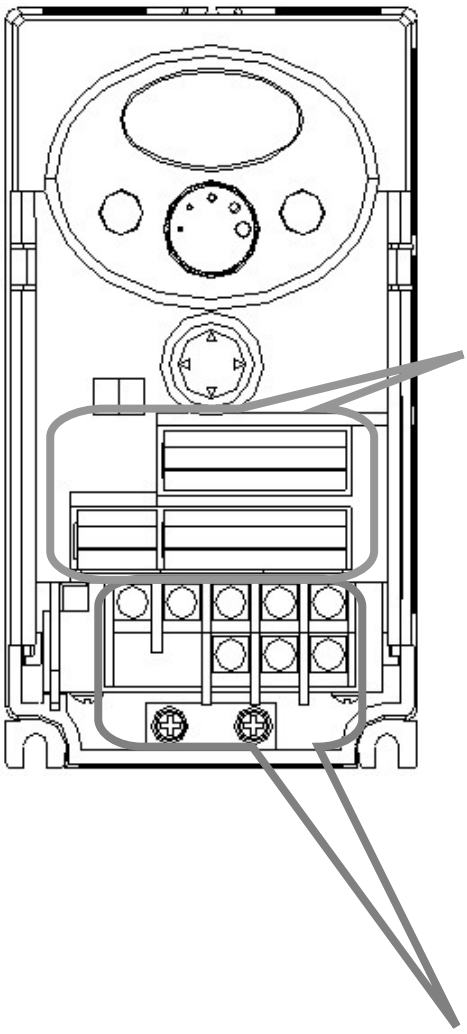

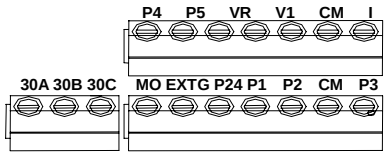

Terminal	Features		
P1	Multi-function input terminal	Initial setting	FX : Forward run
P2			RX : Reverse run
P3			BX : Emergency stop
P4			JOG : Jog operation
P5			RST : Fault reset
P24	24V power for P1-P5		
VR	12V power supply for potentiometer		
V1	0-10V Analog Input terminal		
I	0-20mA Analog Input terminal		
CM	Common Terminal for P1-P5, AM, P24		
AM	Multi-function Analog output terminal (0 ~ 10V)		
CM	Common terminal for AM terminal		
MO	Multi-function open collector output terminal		
EXTG	Ground T/M for MO		
30A	Multi-function relay output terminal	A contact output	
30B		B contact output	
30C		30A 30B Common	

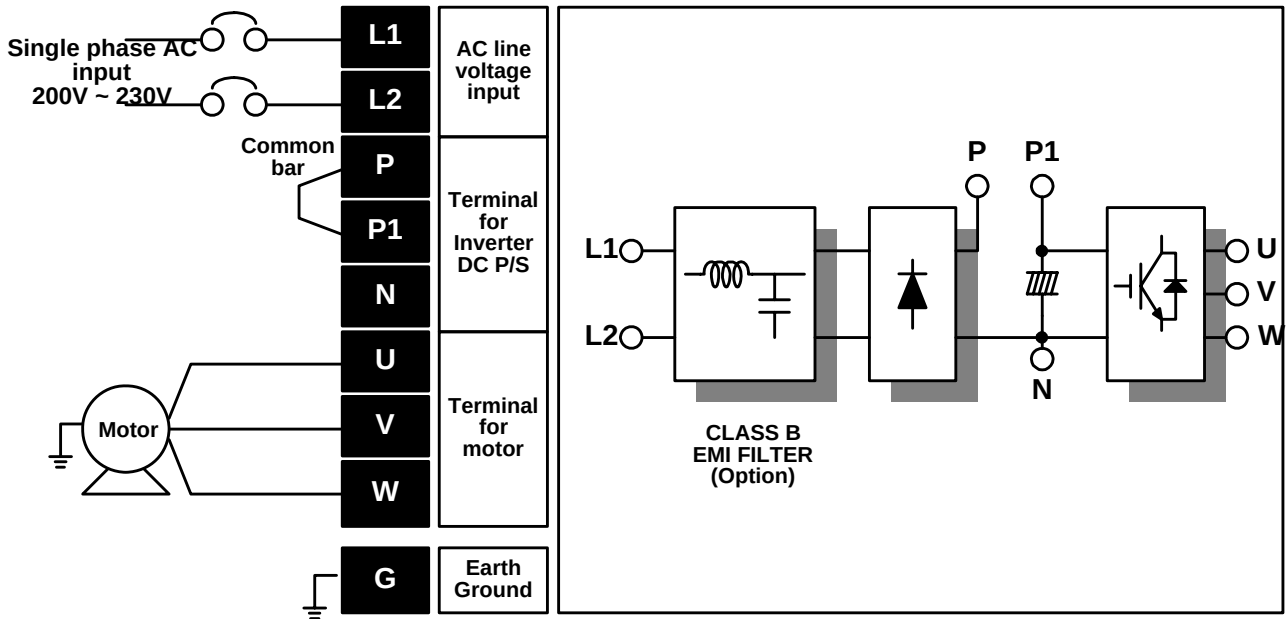

WALTHER FLENDER®
ANTRIEBSTECHNIK

3.2 Specifications for power terminal block wiring

	0001XBK2	0002XBK2	0003XBK2	0005XBK2
	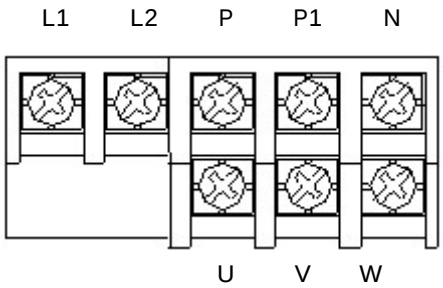		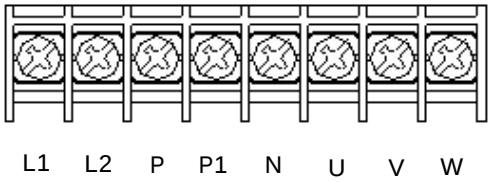	
Input wire size	$2mm^2$	$2mm^2$	$3.5mm^2$	$3.5mm^2$
Output wire	$2mm^2$	$2mm^2$	$3.5mm^2$	$3.5mm^2$
Ground Wire	$2mm^2$	$2mm^2$	$3.5mm^2$	$3.5mm^2$
Terminal Lug	$2mm^2$,3.5 ϕ	$2mm^2$,3.5 ϕ	$3.5mm^2$,3.5 ϕ	$3.5mm^2$,3.5 ϕ
Tightening Torque	13kgf、cm	13kgf、cm	15kgf、cm	15kgf、cm

⚠ CAUTION

Make sure the input power is off before wiring.

When power supply is switched off following operation, wait at least 10 minutes after LED keypad display is off before you start working on it. If tester is available, check the voltage between P1 and N terminals. Wiring should be performed after verifying that input voltage in inverter DC circuitry is all exhausted.

Applying input power supply to the output terminals U, V and W causes internal inverter damage.

Use ring terminals with insulated caps when wiring the input power and motor wiring.

Do not leave wire fragments inside the inverter. Wire fragments can cause faults, breakdowns and malfunctions.

Never short P1 or P and N terminals. Shorting terminals may cause internal inverter damage.

Do not install a power factor capacitor, surge suppressor or RFI filters in the output side of the inverter. Doing so may damage these components.

⚠ WARNING

Use the Type 3 grounding method (Ground impedance: Below 100ohm).

Use the dedicated ground terminal to ground the inverter. Do not use the screw in the case or chassis, etc for grounding.

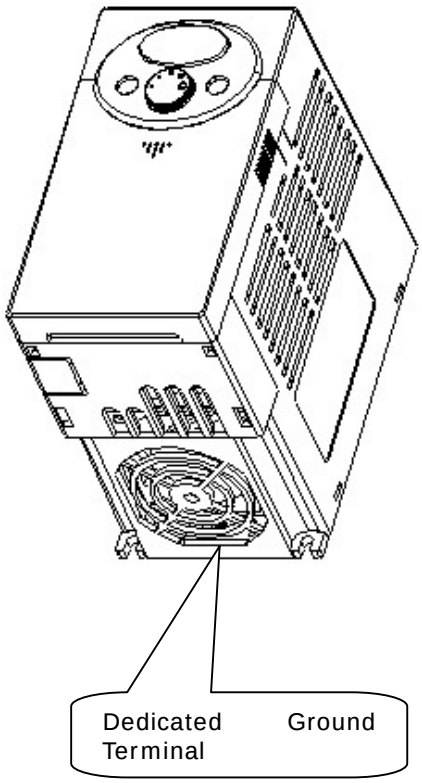

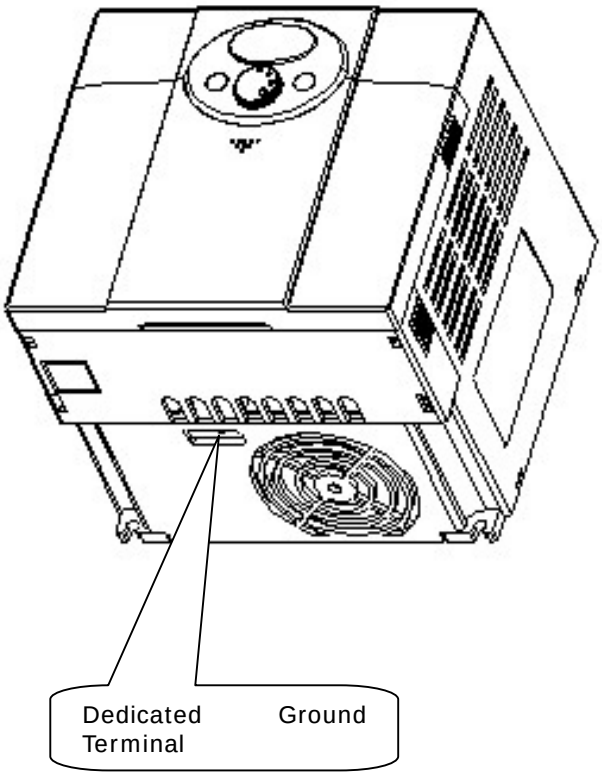

☞ Note : Remove front and bottom cover before starting grounding.

☞ Caution : Follow the specifications below when grounding the inverter.

Model	SERIES N 2S 0001 - SERIES N 2S 0002	SERIES N 2S 0003 - SERIES N 2S 0005
Wire size	$2mm^2$	$2mm^2$
Lug	$2mm^2$, 3ϕ	$2mm^2$, 3ϕ
Ground impedance	Below 100 ohm	Below 100 ohm

3.3 I/O terminal block specification

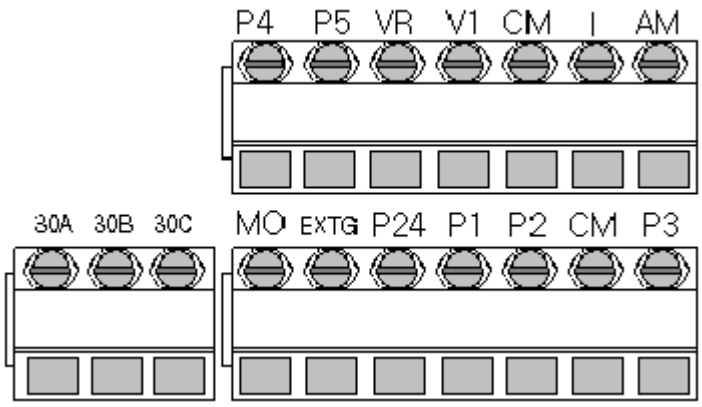

Terminal	Terminal Description	Wire size	Torque (Nm)	Note
P1/P2/P3 P4/P5	Multi-function input T/M P1-P5	22 AWG, 0.3 mm^2	0.4	
CM	Common Terminal for P1-P5, AM, P24	22 AWG, 0.3 mm^2	0.4	
VR	12V power supply for external potentiometer	22 AWG, 0.3 mm^2	0.4	
V1	0-10V Analog Voltage input	22 AWG, 0.3 mm^2	0.4	
I	0-20mA Analog Current input	22 AWG, 0.3 mm^2	0.4	
AM	Multi-function Analog output	22 AWG, 0.3 mm^2	0.4	
MO	Multi-function open collector output T/M	20 AWG, 0.5 mm^2	0.4	
EXTG	Ground T/M for MO	20 AWG, 0.5 mm^2	0.4	
P24	24V Power Supply for P1-P5	20 AWG, 0.5 mm^2	0.4	
30A	Multi-function relay A/B contact output	20 AWG, 0.5 mm^2	0.4	
30B		20 AWG, 0.5 mm^2	0.4	
30C	30A, B Common	20 AWG, 0.5 mm^2	0.4	

☞Note: Tie the control wires more than 15cm away from the control terminals. Otherwise, it interferes front cover reinstallation.

☞Note: When you use external power supply for multi-function input terminal (P1~P5), apply voltage more than 12V to activate.

3.4 PNP/NPN selection

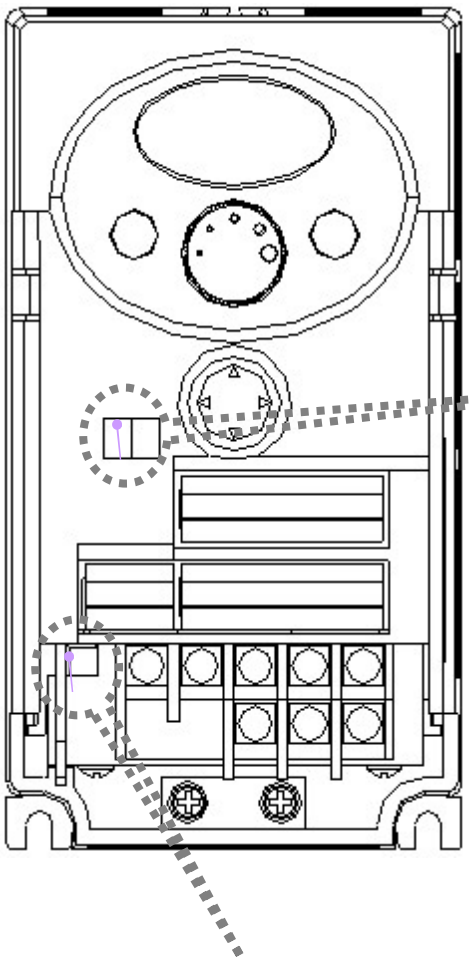

1. When using P24 [NPN]

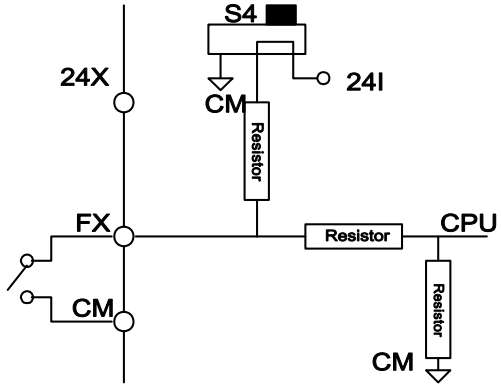

2. When using 24V external power supply [PNP]

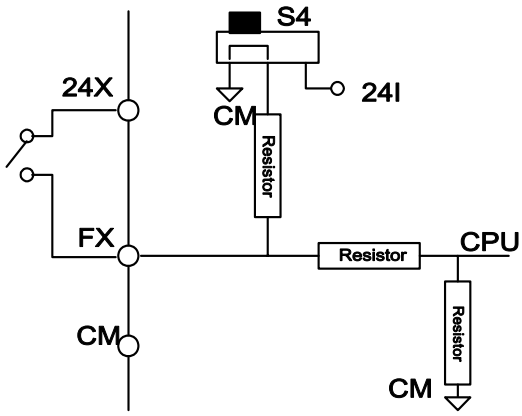

2. Communication option card connector: Install communication option card here.

☞Note: MODBUS RTU option card is available for SERIES N. Refer to MODBUS RTU option card manual for more details.

Notes:

4 Basic configuration

4.1 Connection of peripheral devices to the inverter

The following devices are required to operate the inverter. Proper peripheral devices must be selected and correct connections made to ensure proper operation. An incorrectly applied or installed inverter can result in system malfunction or reduction in product life as well as component damage. You must read and understand this manual thoroughly before proceeding.

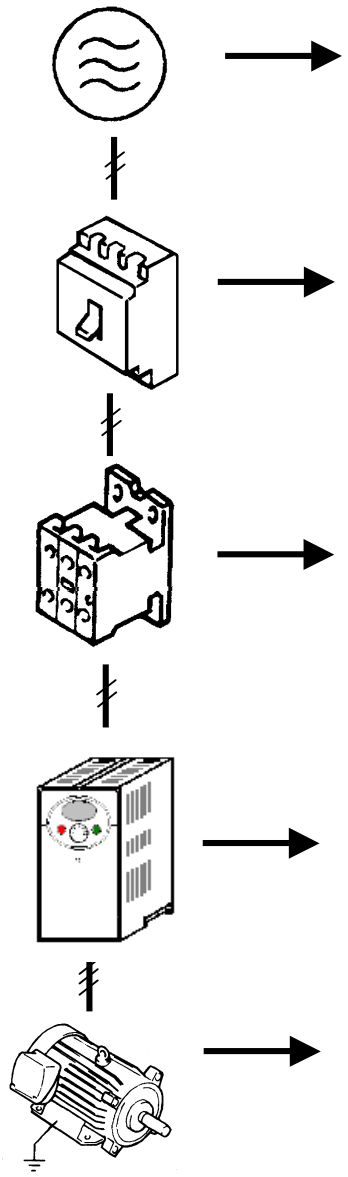

AC Supply Source	Use the power supply within the permissible range of inverter input power rating. (See 14.Specifications)
MCCB or Earth leakage circuit breaker (ELB)	Select circuit breakers with care. A large inrush current may flow in the inverter at power on.
Magnetic Contactor	Install it if necessary. When installed, do not use it for the purpose of starting or stopping. Otherwise, it could lead to reduction in product life.
Installation and wiring	To operate the inverter with high performance for a long time, install the inverter in a proper place in the correct direction and with proper clearances. Incorrect terminal wiring could result in the equipment damage.
To motor	Do not connect a power factor capacitor, surge suppressor or radio noise filter to the output side of the inverter.

4.2 MCCB, Earth leakage circuit breaker and Magnetic contactor specification

Model	MCCB / Circuit braker	Magnetic Contactor
SERIES N 2S 0001	10A	AC1-12
SERIES N 2S 0002	20A	AC1-18
SERIES N 2S 0003	25A	AC1-25
SERIES N 2S 0005	32A	AC1-32

4.3 Input fuse

Model	AC input fuse
SERIES N 2S 0001	10A
SERIES N 2S 0002	20A
SERIES N 2S 0003	30A
SERIES N 2S 0005	40A

5 Programming Keypad

5.1 Keypad features

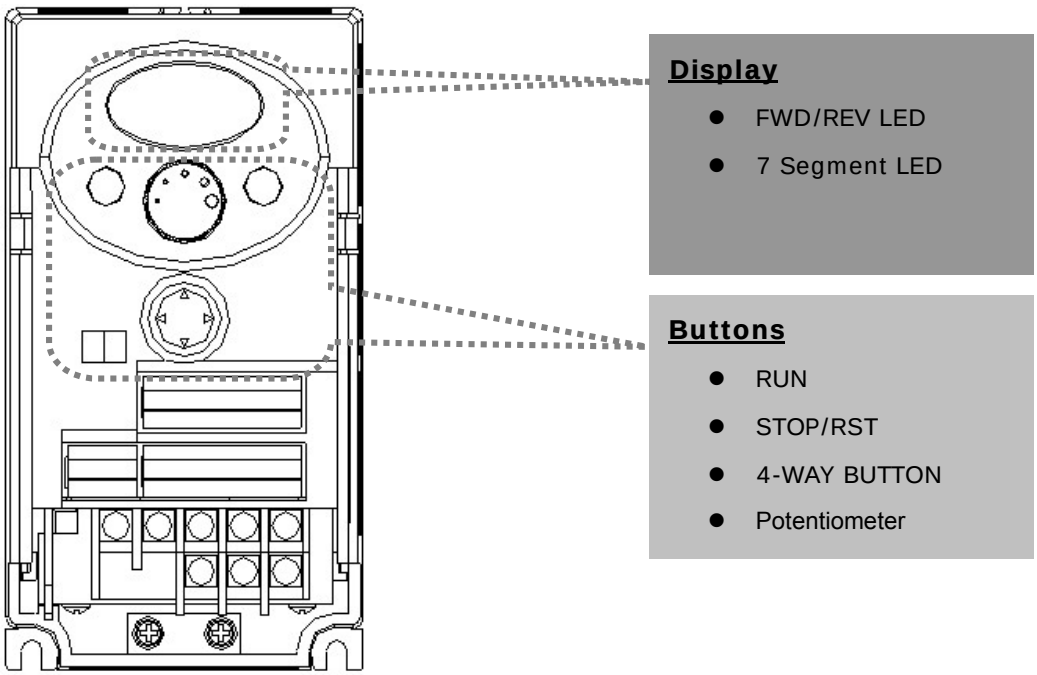

Display		
FWD	Lit during forward run	Blinks when a fault occurs
REV	Lit during reverse run	
7-Segment (LED Display)	Displays operation status and parameter information	

Keys		
RUN		Used to give a run command
STOP/RST		STOP : Stop the operation RST : Reset faults
4-WAY BUTTON		Programming keys (UP/Down/Left/Right arrow and Prog/Ent keys)
▲	UP	Used to scroll through codes or increase parameter value
▼	Down	Used to scroll through codes or decrease parameter value
◀	Left	Used to jump to other parameter groups or move a cursor to the left to change the parameter value
▶	Right	Used to jump to other parameter groups or move cursor to the right to change the parameter value
●	Prog/Ent key	Used to set the parameter value or save the changed parameter value
Potentiometer		Used to change the value of run frequency

5.2 Alpha-numeric view on the LED keypad

0	0	A	A	K	K	U	U
1	1	b	B	L	L	v	V
2	2	C	C	M	M	W	W
3	3	d	D	n	N	X	X
4	4	E	E	O	O	Y	Y
5	5	F	F	P	P	Z	Z
6	6	G	G	q	Q		
7	7	H	H	r	R		
8	8	I	I	S	S		
9	9	J	J	t	T		

5.3 Moving to other groups

There are 4 different parameter groups in SERIES N series as shown below.

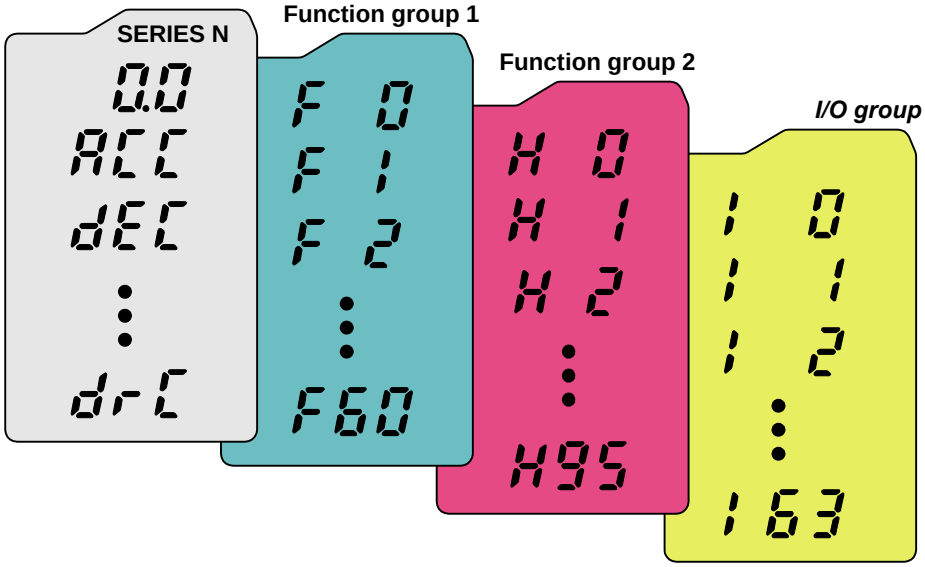

Drive group	Basic parameters necessary for the inverter to run. Parameters such as Target frequency, Accel/Decel time are settable.
Function group 1	Basic function parameters to adjust output frequency and voltage.
Function group 2	Advanced function parameters to set parameters for such as PID Operation and second motor operation.
I/O (Input/Output) group	Parameters necessary to make up a sequence using Multi-function input/output terminal.

Moving to other parameter groups is only available in the first code of each group as the figure shown below.

Moving to other groups using the Right (▶) key	Moving to other groups using the Left (◀) key
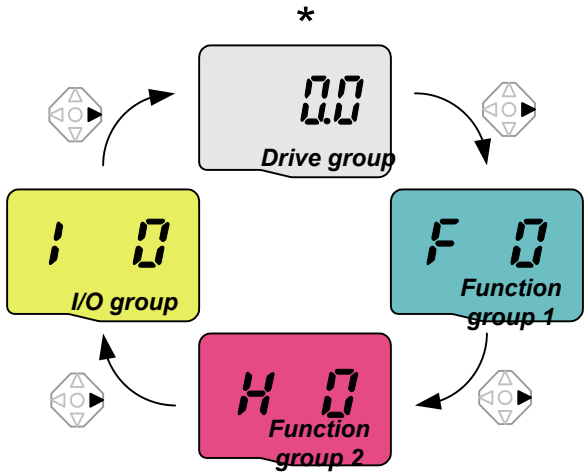	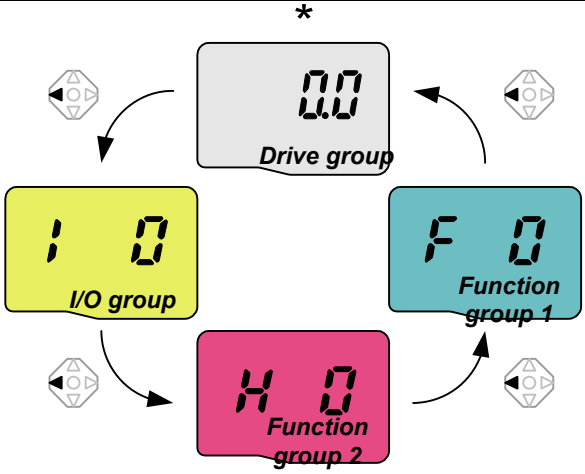

* Target frequency can be set at **0.0** (the 1st code of drive group). Even though the preset value is 0.0, it is user-settable. The changed frequency will be displayed after it is changed.

WALTHER FLENDER®
ANTRIEBSTECHNIK

How to move to other groups at the 1st code of each group.

1	0.0	-. **<u>The 1st code in drive group "0.0"</u>** will be displayed when AC input power is applied. -. Press the right arrow (▶) key once to go to Function group 1.
2	F 0	-. **<u>The 1st code in Function group 1 "F 0"</u>** will be displayed. -. Press the right arrow (▶) key once to go to Function group 2.
3	H 0	-. **<u>The 1st code in Function group 2 "H 0"</u>** will be displayed. -. Press the right arrow (▶) key once to go to I/O group.
4	I 0	-. **<u>The 1st code in I/O group "I 0"</u>** will be displayed. -. Press the right arrow (▶) key once again to return to drive group.
5	0.0	-. Return to **<u>the 1st code in drive group "0.0"</u>**.

♣ If the left arrow key (◀) is used, the above will be executed in the reverse order.

How to move to other groups from any codes other than the 1st code

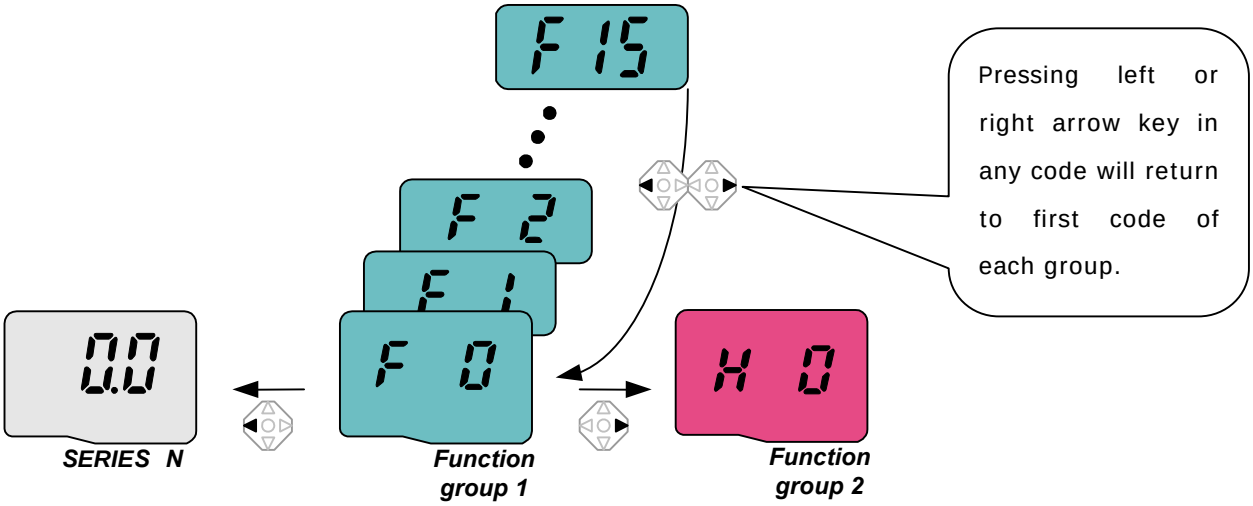

When you would like to move from the F 15 to function group 2

1	F 15	-. In F 15, press the Left (◀) or Right arrow (▶) key. Pressing the key goes to the first code of the group.
2	F 0	-. The 1st code in function group 1 "F 0" is displayed. -. Press the right arrow (▶) key.
3	H 0	-. The 1st code in function group 2 "H 0" will be displayed.

5.4 How to change the codes in a group

Code change in drive group.

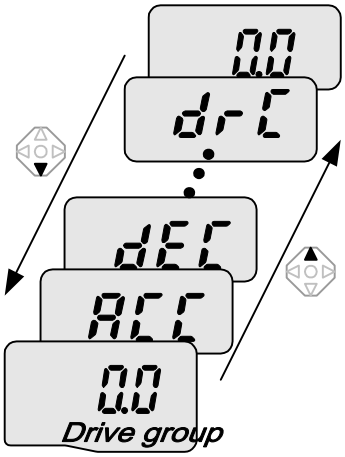

1	0.0	-. In the 1st code in drive group “0.0”, press the Up (▲) key once.
2	ACC	-. The 2nd code in drive group “ACC” is displayed. -. Press the Up (▲) key once.
3	dEC	-. The 3rd code “dEC” in drive group is displayed. -. Keep pressing the Up (▲) key until the last code appears.
4	drC	-. The last code in drive group “drC” is displayed. -. Press the Up (▲) key again.
5	0.0	-. Return to the first code of drive group.
♣ Use Down (▼) key for the opposite order.		

Code change in Function group 1.

When moving from the “F 0” to the “F 15” directly

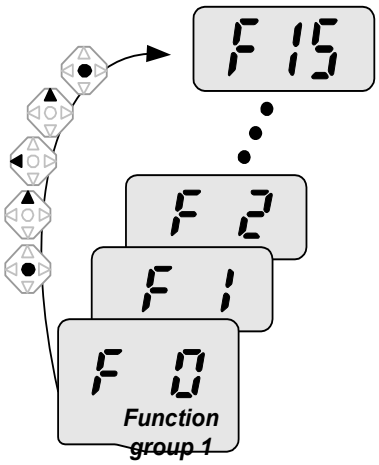

1	F 0	-. Press the Prog/Ent (●) key in “F 0”.
2	1	-. 1 (the code number of F1) is displayed. Use the Up (▲) key to set to 5.
3	05	-. “**0**5” is displayed by pressing the Left (◀) key once to move the cursor to the left. The numeral having a cursor is displayed brighter. In this case, **0** is active. -. Use the Up (▲) key to set to 1.
4	15	-. **1**5 is set. -. Press the Prog/Ent (●) key once.
5	F 15	-. Moving to F 15 has been complete.
♣ Function group 2 and I/O group are settable with the same setting.		

For changing code from any codes other than F 0

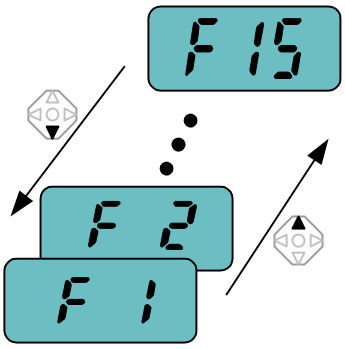

When moving from F 1 to F 15 in Function group 1.

1	F 1	-. In F 1, continue pressing the Up (▲) key until F15 is displayed.
2	F 15	-. Moving to F15 has been complete.

♣ The same rule applies to Function group 2 and I/O group.

♣ Note: Some codes will be skipped in the middle of increment (▲)/decrement (▼) for code change. That is because it is programmed that some codes are intentionally left blank for future use or the codes user does not use are invisible. For example, when F23 [High/low frequency limit select] is set to “O (No) ”, F24 [High frequency limit] and F23 [Low frequency limit] are not displayed during code change. But When F23 is set to “1(Yes)”, F23 and F24 will appear on the display.

5.5 Parameter setting method

Changing parameter value in drive group

When changing ACC time from 5.0 sec to 16.0

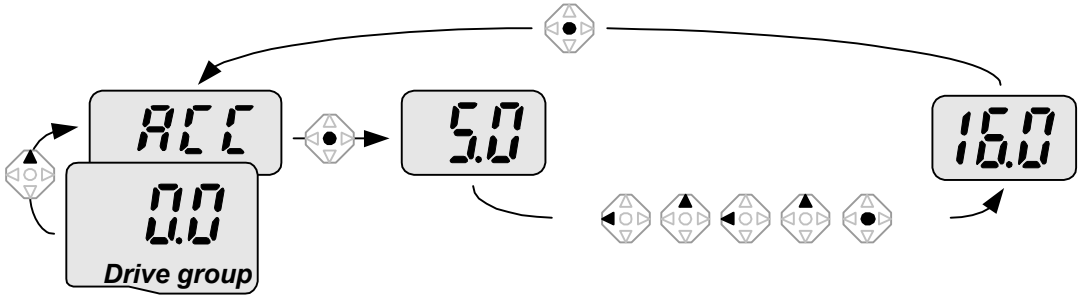

1	0.0	-. In the first code “0.0”, press the Up (▲) key once to go to the second code.
2	ACC	-. ACC [Accel time] is displayed. -. Press the Prog/Ent key (●) once.
3	5.0	-. Preset value is 5.**0**, and the cursor is in the digit **0**. -. Press the Left (◀) key once to move the cursor to the left.
4	5.0	-. The digit **5** in **5**.0 is active. Then press the Up (▲) key once.
5	6.0	-. The value is increased to **6**.0 -. Press the Left (◀) key to move the cursor to the left.
6	06.0	-. **0**.60 is displayed. The first **0** in **0**.60 is active. -. Press the Up (▲) key once.
7	16.0	-. **1**6.0 is set. -. Press the Prog/Ent (●) key once. -. **1**6.0 is blinking. -. Press the Prog/Ent (●) key once again to return to the parameter name.
8	ACC	-. **ACC** is displayed. **Accel time** is changed from 5.0 to 16.0 sec.

♣ **In step 7, pressing the Left (◀) or Right (▶) key while 16.0 is blinking will disable the setting.**

Note) Pressing the Left (◀)/ Right (▶) /Up (▲) /Down (▼) key while cursor is blinking will cancel the parameter value change.

When changing run frequency to 30.05 Hz in drive group

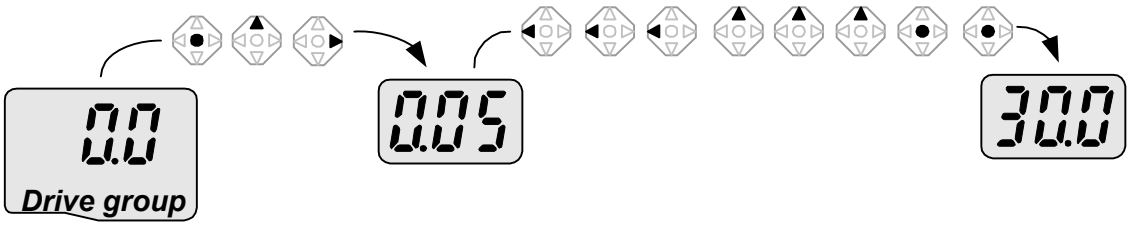

1	0.0	-. In “0.0”, press the Prog/Ent (●) key once.
2	0.0	-. The second **0** in 0.**0** is active. -. Press the Right (▶) key once to move the cursor to the right.
3	0.00	-. 0.0**0** is displayed -. Press the Up (▲) key until 5 is displayed.
4	0.05	-. Press the Left (◀) key once.
5	0.05	-. The middle digit in 0.**0**5 is active. -. Press the Left (◀) key once.
6	0.05	-. Press the Left (◀) key once.
7	00.0	-. **0**0.0 is displayed with the first 0 active, but the actual value 0.05 remains unchanged. -. Press the Up (▲) key to set to 3.
8	30.0	-. Press the Prog/Ent (●) key once. -. **3**0.0 is blinking. -. Press the Prog/Ent (●) key once.
9	30.0	-. Run frequency is set to 30.0 when the blinking stops.

♣ **<u>Three digit LED display is provided in SERIES N Series. However, digit expansion is available using the Left(◀)/Right(▶) key for parameter setting and monitoring.</u>**

♣ **In step 8, pressing the Left (◀) or Right (▶) key while 30.0 is blinking will disable the setting.**

Changing parameter values in Function 1, 2 and I/O group

When changing the parameter value of F 27 from 2 to 5

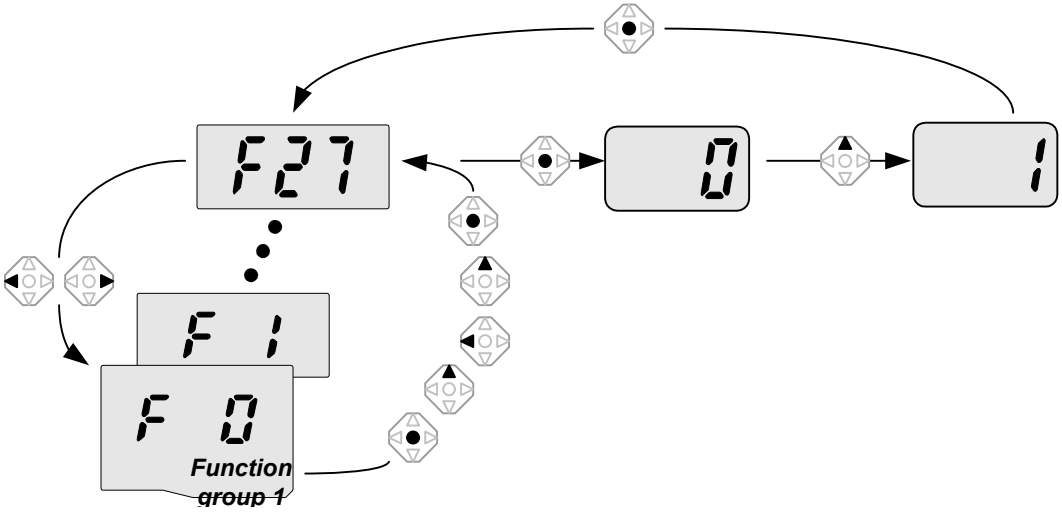

1	F 0	-. In F0, press the Prog/Ent (●) key once.
2	1	-. Check the present code number. -. Increase the value to 7 by pressing the Up (▲) key.
3	7	-. When 7 is set, press the Left (◀) key once.
4	07	-. **0** in **07** is active. -. Increase the value to 2 by pressing the Up (▲) key.
5	27	-. **27** is displayed -. Press the Prog/Ent (●) key once.
6	F27	-. The parameter number F27 is displayed. -. Press the Prog/Ent (●) key once to check the set value.
7	0	-. The set value is 0. -. Increase the value to 1 by pressing the Up (▲) key.
8	1	-. Press the Prog/Ent (●) key once.
9	F27	-. F27 is displayed after 5 stops blinking. Changing parameter value has been complete. -. Press the either Left (◀) or Right (▶) key once to go to the first code.
10	F 0	-. Return to F0.

♣ **The above setting is also applied to change parameter values in function group 2 and I/O group.**

5.6 Monitoring of operation status

Monitoring output current in drive group

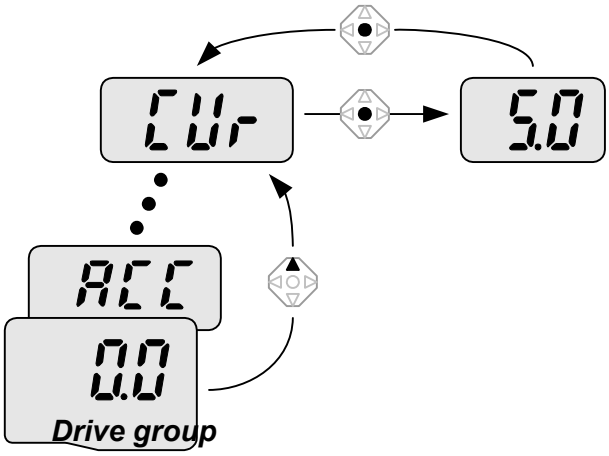

1	0.0	-. In [0.0], continue pressing the Up (▲) or Down (▼) key until [Cur] is displayed.
2	Cur	-. Monitoring output current is provided in this parameter. -. Press the Prog/Ent (●) key once to check the current.
3	5.0	-. Present output current is 5.0 A. -. Press the Prog/Ent (●) key once to return to the parameter name.
4	Cur	-. Return to the output current monitoring code.

♣ Other parameters in drive group such as dCL (Inverter DC link current) or vOL (Inverter output voltage) can be monitored via the same method.

WALTHER FLENDER®
ANTRIEBSTECHNIK

How to monitor Motor rpm in drive group when the motor is rotating in 1730 rpm.

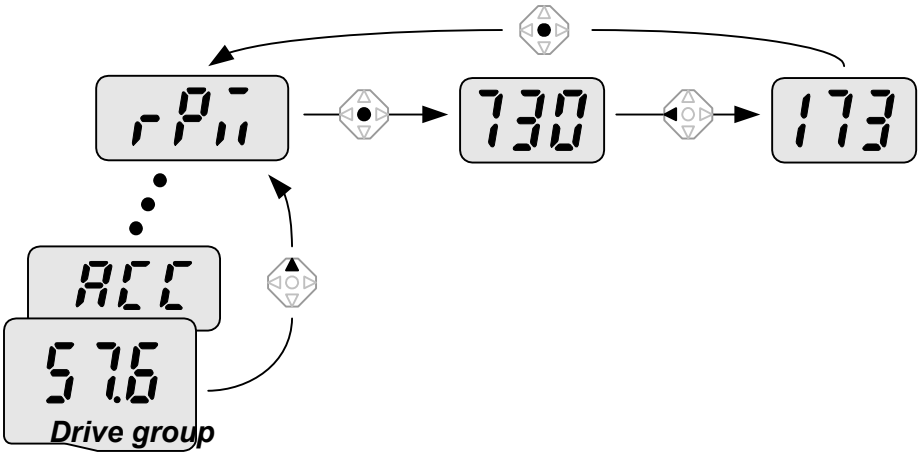

1	57.6	-. Present run frequency can be monitored in the first code of Function group 1. The preset frequency is 57.6Hz. -. Continue pressing the Up (▲) /Down (▼) key until rPM is displayed.
2	rPM	-. Motor rpm can be monitored in this code. -. Press the Prog/Ent (●) key once.
3	730	-. Last three digits **730** in 1**730** rpm is shown on the LED. -. Press the Left (◀) key once.
4	173	-. First three digits **173** in 1730 rpm are shown on the LED. -. Press the Prog/Ent (●) key once.
5	rPM	-. Return to the rPM code.

How to monitor fault condition in drive group

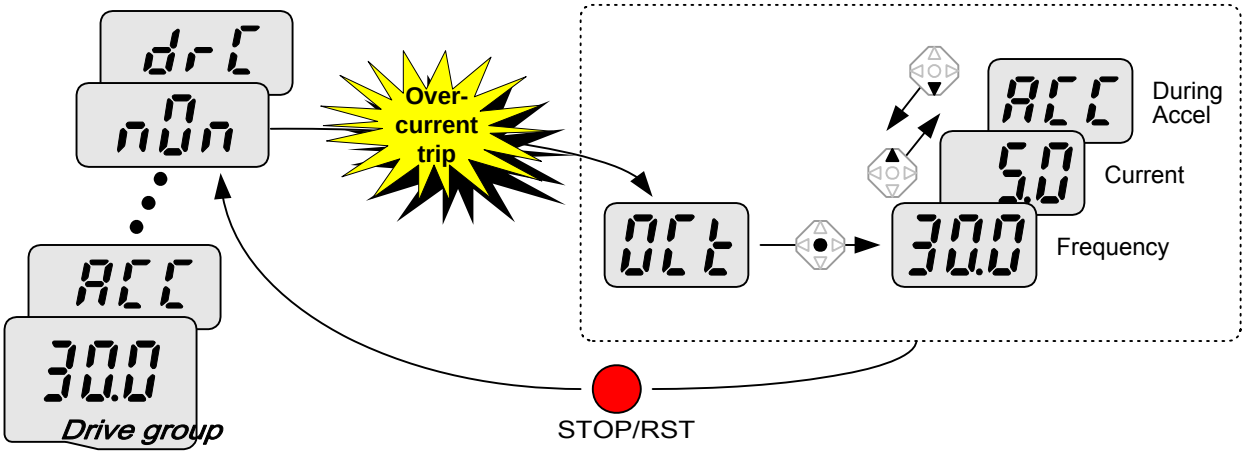

1	OCt	-. This message appears when an Overcurrent fault occurs. -. Press the Prog/Ent (●) key once.
2	30.0	-. The **run frequency** at the time of fault (30.0) is displayed. -. Press the Up (▲) key once.
3	5.0	-. The **output current** at the time of fault is displayed. -. Press the Up (▲) key once.
4	ACC	-. Operating status is displayed. A fault occurred during acceleration. -. Press the STOP/RST key once.
5	nOn	-. A fault condition is cleared and “nOn” is displayed.

When more than one fault occur at the same time,

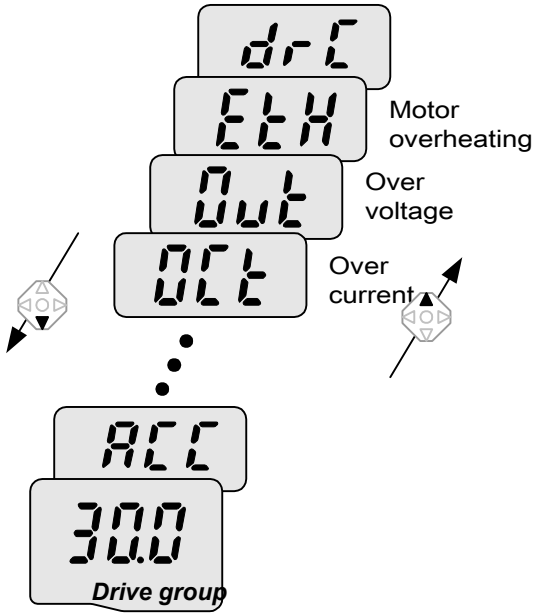

-. Maximum three faults information is displayed as shown left.

WALTHER FLENDER®
ANTRIEBSTECHNIK

5.7 Parameter initialize

How to initialize parameters of all four groups in H93

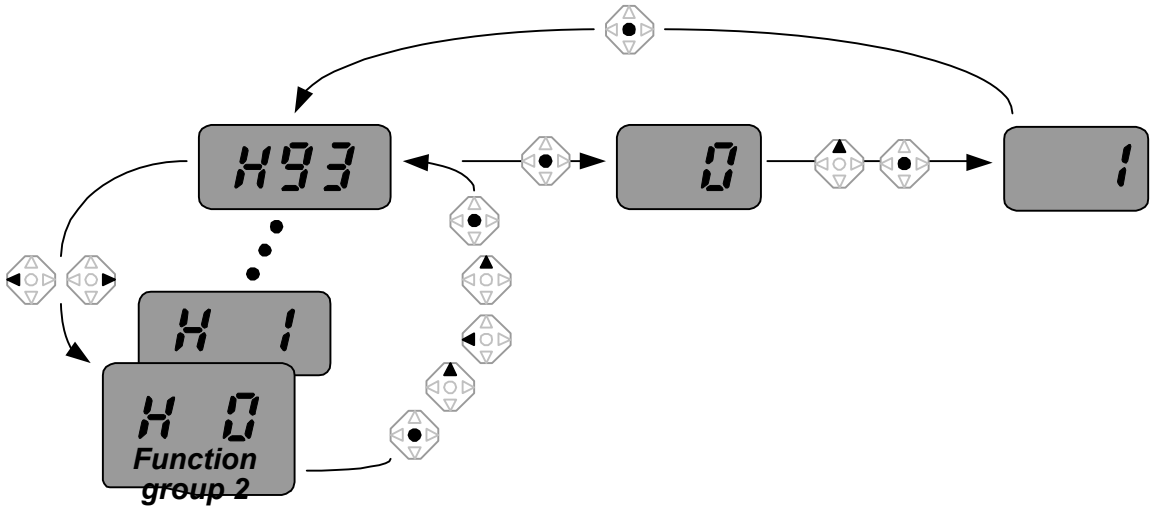

1	H 0	-. In H0, press the Prog/Ent (●) key once.
2	1	-. Code number of H0 is displayed. -. Increase the value to 3 by pressing the Up (▲) key.
3	3	-. In **3**, press the Left (◀) key once to move the cursor to the left.
4	03	-. **0**3 is displayed. **0** in **0**3 is active. -. Increase the value to 9 by pressing the Up (▲) key.
5	93	-. **9**3 is set. -. Press the Prog/Ent (●) key once.
6	H93	-. The parameter number is displayed. -. Press the Prog/Ent (●) key once.
7	0	-. Present setting is 0. -. Press the Up (▲) key once to set to 1 to activate parameter initialize.
8	1	-. Press the Prog/Ent (●) key once.
9	H93	-. Return to the parameter number after blinking. **Parameter initialize** has been complete. -. Press the either Left (◀) or Right (▶) key.
10	H 0	-. Return to H0.

Notes:

6 Basic operation

6.1 Frequency Setting and Basic Operation

☞ **Caution :** The following instructions are given based on the fact that all parameters are set to factory defaults. Results could be different if parameter values are changed. In this case, initialize parameter values (see page 10-17) back to factory defaults and follow the instructions below.

Frequency Setting via keypad & operating via terminals

1		-. Apply AC input power to the inverter.
2		-. When 0.0 appears, press the Prog/Ent (●) key once.
3		-. The second digit in 0.**0** is lit as shown left. -. Press the Left (◀) key twice.
4	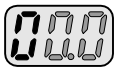	-. **0**0.0 is displayed and the first **0** is lit. -. Press the Up (▲) key.
5	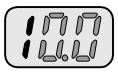	-. **1**0.0 is set. Press the Prog/Ent (●) key once. -. 10.0 is blinking. Press the Prog/Ent (●) key once.
6		-. Run frequency is set to **10.0** Hz when the blinking stops. -. Turn on the switch between P1 (FX) and CM terminals.
7		-. FWD (Forward run) lamp begins to blink and accelerating frequency is displayed on the LED. -. When target run frequency 10Hz is reached, **10.0** is displayed. -. Turn off the switch between P1 (FX) and CM terminals.
8		-. FWD lamp begins to blink and decelerating frequency is displayed on the LED. -. When run frequency is reached to 0Hz, FWD lamp is turned off and **10.0** is displayed.

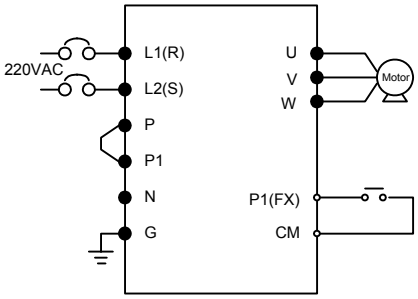

Wiring

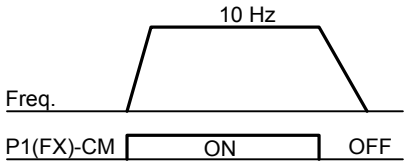

Operating pattern

WALTHER FLENDER®
ANTRIEBSTECHNIK

Frequency Setting via potentiometer & operating via terminals

1		-. Apply AC input power to the inverter.
2	0.0	-. When 0.0 appears Press the Up (▲) key four times.
3	Fr9	-. Frq is displayed. Frequency setting mode is selectable. -. Press the Prog/Ent (●) key once.
4	0	-. Present setting method is set to 0 (frequency setting via keypad). -. Press the Up (▲) key twice.
5	2	-. After 2 (Frequency setting via potentiometer) is set, press the Prog/Ent (●) key once.
6	Fr9	-. Frq is redisplayed after 2 stops blinking. -. Turn the potentiometer to set to 10.0 Hz in either Max or Min direction.
7	10.0	-. Turn on the switch between P1 (FX) and CM (See Wiring below). -. FWD lamp begins to blink and the accelerating frequency is displayed on the LED. -. When run frequency 10Hz is reached, the value is displayed as shown left. -. Turn off the switch between P1 (FX) and CM terminals.
8	10.0	-. FWD lamp begins to blink and the decelerating frequency is displayed on the LED. -. When the run frequency is reached to 0 Hz, FWD lamp is turned off and **10.0** is displayed as shown left.

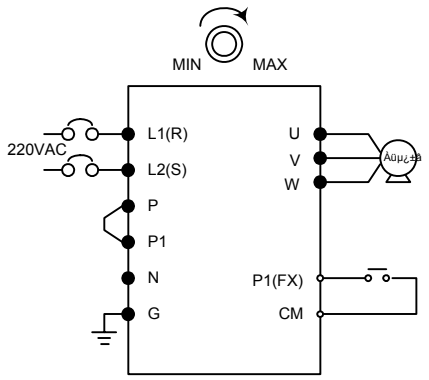

Wiring

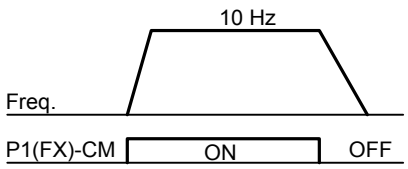

Operating pattern

WALTHER FLENDER®
ANTRIEBSTECHNIK

Frequency setting via potentiometer & operating via the Run key		
1		-. Apply AC input power to the inverter.
2	0.0	-. When 0.0 is displayed, press the Up (▲) key three times.
3	drv	-. drv is displayed. Operating method is selectable. -. Press the Prog/Ent (●) key.
4	1	-. Check the present operating method (“1” is run via control terminal) -. Press the Prog/Ent (●) key and then Down (▼) key once.
5	0	-. After setting “0”, press the Prog/Ent (●) key.
6	drv	-. “drv” is displayed after “0” is blinking. Operation method is set via the Run key on the keypad. -. Press the Up (▲) key once.
7	Fr9	-. Different frequency setting method is selectable in this code. -. Press the Prog/Ent (●) key.
8	0	-. Check the present frequency setting method (“**0**” is run via keypad). -. Press the Up (▲) key twice.
9	2	-. After checking “**2**” (frequency setting via potentiometer), press the Prog/Ent (●) key.
10	Fr9	-. “**Frq**” is displayed after “2” is blinking. Frequency setting is set via the potentiometer on the keypad. -. Turn the potentiometer to set to 10.0 Hz in either Max or Min direction.
11	10.0	-. Press the Run key on the keypad. -. FWD lamp begins to blink and accelerating frequency is displayed on the LED. -. When run frequency 10Hz is reached, **10.0** is displayed as shown left. -. Press the STOP/RST key.
12	10.0	-. FWD lamp begins to blink and decelerating frequency is displayed on the LED. -. When run frequency is reached to 0Hz, FWD lamp is turned off and **10.0** is displayed as shown left.

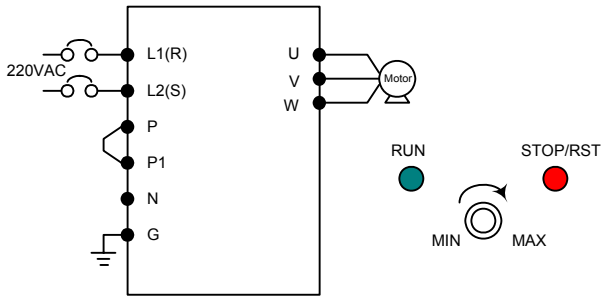

Wiring

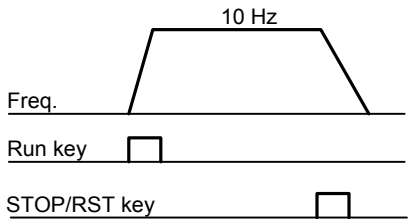

Operating pattern

WALTHER FLENDER®
ANTRIEBSTECHNIK

Notes:

7 Function list

7.1 Drive Group

LED display	Parameter name	Min/Max range	Description	Factory defaults	Adjustable during run	Page
0.0	[Frequency command]	0/400 [Hz]	▪ This parameter sets the frequency that the inverter is commanded to output. ▪ During Stop: Frequency Command ▪ During Run: Output Frequency ▪ During Multi-step operation: Multi-step frequency 0. ▪ It cannot be set greater than F21-[Max frequency].	0.0	O	9-1
ACC	[Accel time]	0/6000 [sec]	▪ During Multi-Accel/Decel operation, this parameter serves as Accel/Decel time 0.	5.0	O	9-10
dEC	[Decel time]			10.0	O	9-10
Drv	[drive mode] (Run/Stop mode)	0/3	0 Run/Stop via Run/Stop key on the keypad	1	X	9-7
			1 Run/Stop via control terminal: FX : Motor forward run; RX : Motor reverse run			9-78
			2 Run/Stop via control terminal: FX : Run/Stop enable; RX : Motor reverse rotation			
			3 Operation via Communication Option			
Frq	[Frequency mode]	0/8	0 Digital: Setting via Keypad 1	0	X	9-1
			1 Digital: Setting via Keypad 2			9-1
			2 Analog: Setting via potentiometer on the keypad(V0)			9-2
			3 Analog: Setting via V1 terminal			9-3
			4 Analog: Setting via I terminal			9-3
			5 Analog: Setting via potentiometer on the keypad + I terminal			9-4
			6 Analog: Setting via V1 + I terminal			9-4
			7 Analog: Setting via potentiometer on the keypad + V1 terminal			9-5

WALTHER FLENDER®
ANTRIEBSTECHNIK

7.1 Drive Group

LED display	Parameter name	Min/Max range	Description			Factory defaults	Adjustable during run	Page
			8		Modbus-RTU Communication			
St1	[Multi-Step frequency 1]	0/400 [Hz]	This parameter sets Multi-Step frequency 1 during Multi-step operation.			10.0	O	9-6
St2	[Multi-Step frequency 2]		This parameter sets Multi-Step frequency 2 during Multi-step operation.			20.0	O	9-6
St3	[Multi-Step frequency 3]		This parameter sets Multi-Step frequency 3 during Multi-step operation.			30.0	O	9-6
CUr	[Output current]		This parameter displays the output current to the motor.			-	-	11-1
rPM	[Motor RPM]		This parameter displays the number of Motor RPM.			-	-	11-1
dCL	[Inverter DC link voltage]		This parameter displays DC link voltage inside the inverter.			-	-	11-1
vOL	[User display select]		This parameter displays the item selected at H73- [Monitoring item select].			vOL	-	11-2
			vOL	Output voltage				
			POr	Output power				
			tOr	Torque				
nOn	[Fault Display]		This parameter displays the types of faults, frequency and operating status at the time of the fault			-	-	11-2
drC	[Direction of motor rotation select]	F/r	This parameter sets the direction of motor rotation when drv - [drive mode] is set to either 0 or 1.			F	O	9-7
			F	Forward				
			r	Reverse				

WALTHER FLENDER®
ANTRIEBSTECHNIK

7.2 Function group 1

LED display	Parameter name	Min/Max range	Description		Factory defaults	Adjustable during run	Page
F 0	[Jump code]	0/60	This parameter sets the parameter code number to jump.		1	O	5-5
F 1	[Forward/ Reverse run disable]	0/2	0	Fwd and rev run enable	0	X	9-8
			1	Forward run disable			
			2	Reverse run disable			
F 2	[Accel pattern]	0/1	0	Linear	0	X	9-13
F 3	[Decel pattern]		1	S-curve			
F 4	[Stop mode select]	0/2	0	Decelerate to stop	0	X	9-18
			1	Stop via DC brake			
			2	Free run to stop			
F 8 1)	[DC Brake start frequency]	0/60 [Hz]	▪ This parameter sets DC brake start frequency. ▪ It cannot be set below F23 - [Start frequency].		5.0	X	10-1
F 9	[DC Brake wait time]	0/60 [sec]	▪ When DC brake frequency is reached, the inverter holds the output for the setting time before starting DC brake.		1.0	X	10-1
F10	[DC Brake voltage]	0/200 [%]	▪ This parameter sets the amount of DC voltage applied to a motor. ▪ It is set in percent of H33 – [Motor rated current].		50	X	10-1
F11	[DC Brake time]	0/60 [sec]	▪ This parameter sets the time taken to apply DC current to a motor while motor is at a stop.		1.0	X	10-1
F12	[DC Brake start voltage]	0/200 [%]	▪ This parameter sets the amount of DC voltage before a motor starts to run. ▪ It is set in percent of H33 – [Motor rated current].		50	X	10-2
F13	[DC Brake start time]	0/60 [sec]	▪ DC voltage is applied to the motor for DC Brake start time before motor accelerates.		0	X	10-2

7.2 Function group 1

LED display	Parameter name	Min/Max range	Description	Factory defaults	Adjustable during run	Page
F14	[Time for magnetizing a motor]	0/60 [sec]	▪ This parameter applies the current to a motor for the set time before motor accelerates during Sensorless vector control.	1.0	X	10-11
1) : Set F4 to 1 (Stop via DC brake) to view this function						
F20	[Jog frequency]	0/400 [Hz]	▪ This parameter sets the frequency for Jog operation. ▪ It cannot be set above F21 – [Max frequency].	10.0	O	10-3
F21	[Max frequency]	40/400 * [Hz]	▪ This parameter sets the highest frequency the inverter can output. ▪ It is frequency reference for Accel/Decel (See H70) ▪ If H40 is set to 3(Sensorless vector), it can be settable up to 300Hz *. ☞ **Caution : Any frequency cannot be set above Max frequency.**	60.0	X	9-19
F22	[Base frequency]	30/400 [Hz]	▪ The inverter outputs its rated voltage to the motor at this frequency (see motor nameplate). In case of using a 50Hz motor, set this to 50Hz.	60.0	X	9-15
F23	[Start frequency]	0/10 [Hz]	▪ The inverter starts to output its voltage at this frequency. ▪ It is the frequency low limit.	0.5	X	9-19
F24	[Frequency high/low limit select]	0/1	▪ This parameter sets high and low limit of run frequency.	0	X	9-19
F25 2)	[Frequency high limit]	0/400 [Hz]	▪ This parameter sets high limit of the run frequency. ▪ It cannot be set above F21 – [Max frequency].	60.0	X	
F26	[Frequency low limit]	0/400 [Hz]	▪ This parameter sets low limit of the run frequency. ▪ It cannot be set above F25 - [Frequency high limit] and below F23 – [Start frequency].	0.5	X	

WALTHER FLENDER®
ANTRIEBSTECHNIK

7.2 Function group 1

LED display	Parameter name	Min/Max range	Description		Factory defaults	Adjustable during run	Page
F27	[Torque Boost select]	0/1	0	Manual torque boost	0	X	9-17
			1	Auto torque boost			
F28	[Torque boost in forward direction]	0/15 [%]	▪ This parameter sets the amount of torque boost applied to a motor during forward run. ▪ It is set in percent of Max output voltage.		5	X	9-17
F29	[Torque boost in reverse direction]		▪ This parameter sets the amount of torque boost applied to a motor during reverse run. ▪ It is set as a percent of Max output voltage		5	X	9-17
F30	[V/F pattern]	0/2	0	{Linear}	0	X	9-15
			1	{Square}			9-15
			2	{User V/F}			9-16
F31 3)	[User V/F frequency 1]	0/400 [Hz]	▪ This parameter is active when F30 – [V/F pattern] is set to 2 {User V/F}. ▪ It cannot be set above F21 – [Max frequency]. ▪ The value of voltage is set in percent of H70 – [Motor rated voltage]. ▪ The values of the lower-numbered parameters cannot be set above those of higher-numbered.		15.0	X	9-16
F32	[User V/F voltage 1]	0/100 [%]			25	X	
F33	[User V/F frequency 2]	0/400 [Hz]			30.0	X	
F34	[User V/F voltage 2]	0/100 [%]			50	X	
F35	[User V/F frequency 3]	0/400 [Hz]			45.0	X	
F36	[User V/F voltage 3]	0/100 [%]			75	X	
F37	[User V/F frequency 4]	0/400 [Hz]			60.0	X	
F38	[User V/F voltage 4]	0/100 [%]			100	X	
F39	[Output voltage adjustment]	40/110 [%]	▪ This parameter adjusts the amount of output voltage. ▪ The set value is the percentage of input voltage		100	X	9-16

7.2 Function group 1

LED display	Parameter name	Min/Max range	Description	Factory defaults	Adjustable during run	Page
F40	[Energy-saving level]	0/30 [%]	▪ This parameter decreases output voltage according to load status.	0	0	10-12
F50	[Electronic thermal select]	0/1	▪ This parameter is activated when the motor is overheated (time-inverse).	0	0	12-1
2) Only displayed when F24 (Freq High/Low limit select) is set to 1.						
3): Set F30 to 2 (User V/F) to display this parameter.						
F51 4)	[Electronic thermal level for 1 minute]	50/200 [%]	▪ This parameter sets max current capable of flowing to the motor continuously for 1 minute. ▪ The set value is the percentage of H33 – [Motor rated current]. ▪ It cannot be set below F52 – [Electronic thermal level for continuous].	150	0	12-1
F52	[Electronic thermal level for continuous]		▪ This parameter sets the amount of current to keep the motor running continuously. ▪ It cannot be set higher than F51 – [Electronic thermal level for 1 minute].	100	0	
F53	[Motor cooling method]	0/1	0: Standard motor having cooling fan directly connected to the shaft 1: A motor using a separate motor to power a cooling fan.	0	0	
F54	[Overload warning level]	30/150 [%]	▪ This parameter sets the amount of current to issue an alarm signal at a relay or multi-function output terminal (see I54, I55). ▪ The set value is the percentage of H33- [Motor rated current].	150	0	12-2
F55	[Overload warning time]	0/30 [sec]	▪ This parameter issues an alarm signal when the current greater than F54- [Overload warning level] flows to the motor for F55- [Overload warning time].	10	0	

7.2 Function group 1

LED display	Parameter name	Min/Max range	Description	Factory defaults	Adjustable during run	Page
F56	[Overload trip select]	0/1	▪ This parameter turns off the inverter output when motor is overloaded.	1	0	12-3
F57	[Overload trip level]	30/200 [%]	▪ This parameter sets the amount of overload current. ▪ The value is the percentage of H33- [Motor rated current].	180	0	
F58	[Overload trip time]	0/60 [sec]	▪ This parameter turns off the inverter output when the F57- [Overload trip level] of current flows to the motor for F58- [Overload trip time].	60	0	
F59	[Stall prevention select]	0/7	▪ This parameter stops accelerating during acceleration, decelerating during constant speed run and stops decelerating during deceleration.	0	X	12-3
F60	[Stall prevention level]	30/150 [%]	▪ This parameter sets the amount of current to activate stall prevention function during Accel, constant or Decel run. ▪ The set value is the percentage of the H33- [Motor rated current].	150	X	12-3

	During Deceleration	During constant speed	During Acceleration
	Bit 2	Bit 1	Bit 0
0	-	-	-
1	-	-	✓
2	-	✓	-
3	-	✓	✓
4	✓	-	-
5	✓	-	✓
6	✓	✓	-
7	✓	✓	✓

4): Set F50 to 1 to display this parameter

WALTHER FLENDER®
ANTRIEBSTECHNIK

7.3 Function group 2

LED display	Parameter name	Min/Max range	Description	Factory defaults	Adjustable during run	Page
H 0	[Jump code]	1/95	This parameter sets the code number to jump.	1	O	5-5
H 1	[Fault history 1]	-	▪ This parameter stores information on the types of faults, the frequency, the current and the Accel/Decel condition at the time of fault (see page 1000). ▪ The last fault is automatically stored in the H 1- [Fault history 1].	nOn	-	11-4
H 2	[Fault history 2]	-		nOn	-	
H 3	[Fault history 3]	-		nOn	-	
H 4	[Fault history 4]	-		nOn	-	
H 5	[Fault history 5]	-		nOn	-	
H 6	[Reset fault history]	0/1	▪ This parameter clears the fault history saved in H 1-5.	0	O	
H 7	[Dwell frequency]	F23/400 [Hz]	▪ When run frequency is issued, motor starts to accelerate after dwell frequency is applied to the motor during H8- [Dwell time]. ▪ [Dwell frequency] can be set within the range of F21- [Max frequency] and F23- [Start frequency].	5.0	X	
H 8	[Dwell time]	0/10 [sec]	▪ This parameter sets the time for dwell operation.	0.0	X	
H10	[Skip frequency select]	0/1	▪ This parameter sets the frequency range to skip to prevent undesirable resonance and vibration on the structure of the machine.	0	X	9-20
H11 1)	[Skip frequency low limit 1]	0/400 [Hz]	▪ Run frequency cannot be set within the range of H11 through H16. ▪ The frequency values of the low numbered parameters cannot be set above those of the high numbered ones.	10.0	X	
H12	[Skip frequency high limit 1]			15.0	X	
H13	[Skip frequency low limit 2]			20.0	X	

7.3 Function group 2

LED display	Parameter name	Min/Max range	Description	Factory defaults	Adjustable during run	Page
H14	[Skip frequency high limit 2]			25.0	X	
H15	[Skip frequency low limit 3]			30.0	X	
H16	[Skip frequency high limit 3]			35.0	X	
H17	S-Curve accel/decel start side	1/100 [%]	Set the speed reference value to form a curve at the start during accel/decel. If it is set higher, linear zone gets smaller.	40	X	9-13
H18	S-Curve accel/decel end side	1/100 [%]	Set the speed reference value to form a curve at the end during accel/decel. If it is set higher, linear zone gets smaller.	40	X	
H19	[Output phase loss protection select]	0/1	▪ Inverter turns off the output when the phase of the inverter output (U, V, W) is not properly connected.	0	O	12-5
H20	[Power On Start select]	0/1	▪ This parameter is activated when drv is set to 1 or 2 (Run/Stop via Control terminal). ▪ Motor starts acceleration after AC power is applied while FX or RX terminal is ON.	0	O	9-9
H21	[Restart after fault reset]	0/1	▪ This parameter is active when drv is set to 1 or 2 (Run/Stop via Control terminal). ▪ Motor accelerates after the fault condition is reset while the FX or RX terminal is ON.	0	O	

1) Set H10 to 1 to be displayed.

H17, 18 is used when F2, F3 is set to 1 S-Curve.

Function group 2

LED display	Parameter name	Min/Max range	Description	Factory defaults	Adjustable during run	Page
H22 2)	[Speed Search Select]	0/15	▪ This parameter is active to prevent any possible fault when the inverter outputs its voltage to the running motor.	0	O	10-12

	1. H20- [Power On start]	2.Restart after instant power failure	3.Operation after fault occurred	4.Normal acceler-ation
	Bit 3	Bit 2	Bit 1	Bit 0
0	-	-	-	-
1	-	-	-	✓
2	-	-	✓	
3	-	-	✓	✓
4	-	✓	-	-
5	-	✓	-	✓
6	-	✓	✓	
7	-	✓	✓	✓
8	✓	-	-	-
9	✓	-	-	✓
10	✓	-	✓	-
11	✓	-	✓	✓
12	✓	✓	-	-
13	✓	✓	-	✓
14	✓	✓	✓	-
15	✓	✓	✓	✓

H23	[Current level during Speed search]	80/200 [%]	▪ This parameter limits the amount of current during speed search. ▪ The set value is the percentage of the H33- [Motor rated current].	100	O	10-12
H24	[P gain during Speed search]	0/9999	▪ It is the Proportional gain used for Speed Search PI controller.	100	O	

H25	[I gain during speed search]	0/9999	▪ It is the Integral gain used for Speed search PI controller.	1000	O	

2) #4.Normal acceleration has first priority. Even though #4 is selected along with other bits, Inverter starts Speed search #4.

Function group 2

LED display	Parameter Name	Min/Max Range	Description	Factory defaults	Adjustable during run	Page
H26	[Number of Auto Restart try]	0/10	▪ This parameter sets the number of restart tries after a fault occurs. ▪ Auto Restart is deactivated if the fault outnumbers the restart tries. ▪ This function is active when [drv] is set to 1 or 2 {Run/Stop via control terminal}. ▪ Deactivated during active protection function (OHT, LVT, EXT, HWT etc.)	0	O	10-15
H27	[Auto Restart time]	0/60 [sec]	▪ This parameter sets the time between restart tries.	1.0	O	
H30	[Motor type select]	0.2/2.2	0.2 — 0.2 kW 0.4 — 0.4 kW 0.75 — 0.75 kW 1.5 — 1.5 kW 2.2 — 2.2 kW	0.4 1)	X	10-6
H31	[Number of motor poles]	2/12	▪ This setting is displayed via rPM in drive group.	4	X	
H32	[Rated slip frequency]	0/10 [Hz]	▪ $f_s = f_r - \left(\frac{rpm \times P}{120}\right)$ Where, f_s = Rated slip frequency f_r = Rated frequency rpm = Motor nameplate RPM P = Number of Motor poles	3.0 2)	X	
H33	[Motor rated current]	1.0/20 [A]	▪ Enter motor rated current on the nameplate.	1.8	X	

WALTHER FLENDER® ANTRIEBSTECHNIK

Function group 2

LED display	Parameter Name	Min/Max Range	Description	Factory defaults	Adjustable during run	Page
H34	[No Load Motor Current]	0.1/12 [A]	▪ Enter the current value detected when the motor is rotating in rated rpm after the load connected to the motor shaft is removed. ▪ Enter the 50% of the rated current value when it is difficult to measure H34 - [No Load Motor Current].	0.9	X	10-6
H36	[Motor efficiency]	50/100 [%]	▪ Enter the motor efficiency (see motor nameplate).	72	X	
H37	[Load inertia rate]	0/2	▪ Select one of the following according to motor inertia. 0 — Less than 10 times that of motor inertia 1 — About 10 times that of motor inertia 2 — More than 10 times that of motor inertia	0	X	10-6
H39	[Carrier frequency select]	1/15 [kHz]	▪ This parameter affects the audible sound of the motor, noise emission from the inverter, inverter temp, and leakage current. If the value is set higher, the inverter sound is quieter but the noise from the inverter and leakage current will become greater.	3	O	10-16
H40	[Control mode select]	0/3	0 — {Volts/frequency Control} 1 — {Slip compensation control} 2 — {PID Feedback control} 3 — {Sensorless vector control}	0	X	9-15 10-6 10-8 10-11
H41	[Auto tuning]	0/1	▪ If this parameter is set to 1, it automatically measures parameters of the H42 and H43.	0	X	10-10
H42	[Stator resistance (Rs)]	0/5.0[Ω]	▪ This is the value of the motor stator resistance.	-	X	

Function group 2

LED display	Parameter Name	Min/Max Range	Description		Factory defaults	Adjustable during run	Page
H44	[Leakage inductance (Lσ)]	0/300.0 [mH]	▪ This is leakage inductance of the stator and rotor of the motor.		-	X	
H45	Sensorless P gain	0/32767	▪ P gain for Sensorless control		1000	O	
H46	Sensorless I gain		▪ I gain for Sensorless control		100	O	
H50 3)	[PID Feedback select]	0/1	0	Terminal I input (0 ~ 20 mA)	0	X	10-8
			1	Terminal V1 input (0 ~ 10 V)			

3) : Set H40 to 2 (PID control) to display this parameter.

Function group 2

LED display	Parameter Name	Min/Max Range	Description		Factory defaults	Adjustable during run	Page
H51	[P gain for PID controller]	0/999.9 [%]	▪ This parameter sets the gains for the PID controller.		300.0	O	10-8
H52	[Integral time for PID controller (I gain)]	0.1/32.0 [sec]			1.0	O	10-8
H53	Differential time for PID controller (D gain)	0.0 /30.0 [sec]			0.0	O	10-8
H54	F gain for PID controller	0/999.9 [%]	▪ This is the Feed forward gain for the PID controller.		0.0	O	10-8
H55	[PID output frequency limit]	0/400 [Hz]	▪ This parameter limits the amount of the output frequency through the PID control. ▪ The value is settable within the range of F21 – [Max frequency] and H23 – [Start frequency].		60.0	O	10-8
H70	[Frequency Reference for Accel/Decel]	0/1	0	The Accel/Decel time is the time that takes to reach the F21 – [Max frequency] from 0 Hz.	0	X	9-10
			1	The Accel/Decel time is the time that takes to reach a target frequency from the run frequency.			
H71	[Accel/Decel time scale]	0/2	0	Settable unit: 0.01 second.	1	O	9-11
			1	Settable unit: 0.1 second.			
			2	Settable unit: 1 second.			
H72	[Power on display]	0/13	▪ This parameter selects the parameter to be displayed on the keypad when the input power is first applied.		0	O	11-2
			0	Frequency command			
			1	Accel time			

Function group 2

LED display	Parameter Name	Min/Max Range	Description		Factory defaults	Adjustable during run	Page
			2	Decel time			
			3	Drive mode			
			4	Frequency mode			
			5	Multi-Step frequency 1			
			6	Multi-Step frequency 2			
			7	Multi-Step frequency 3			
			8	Output current			
			9	Motor rpm			
			10	Inverter DC link voltage			
			11	User display select			
			12	Fault display			
			13	Direction of motor rotation select			
H73	[Monitoring item select]	0/2	▪ One of the following can be monitored via vOL - [User display select].		0	O	11-2
			0	Output voltage [V]			
			1	Output power [kW]			
			2	Torque [kgf · m]			
H74	[Gain for Motor rpm display]	1/1000 [%]	▪ This parameter is used to change the motor speed display to rotating speed (r/min) or mechanical speed (m/mi). $RPM = \left(\frac{120 \times f}{H31}\right) \times \frac{H74}{100}$		100	O	11-1
H79	[Software version]	0/10.0	▪ This parameter displays the inverter software version.		1.0	X	
H81	[2nd motor Accel time]	0/6000 [sec]	▪ This parameter is active when the selected terminal is ON after I20-I24 is set to 12 {2nd motor select}.		5.0	O	10-16
H82	[2nd motor Decel time]				10.0	O	
H83	[2nd motor base frequency]	30/400 [Hz]			60.0	X	
H84	[2nd motor V/F pattern]	0/2			0	X	

Function group 2

LED display	Parameter Name	Min/Max Range	Description	Factory defaults	Adjustable during run	Page
H85	[2nd motor forward torque boost]	0/15 [%]		5	X	
H86	[2nd motor reverse torque boost]			5	X	10-16
H87	[2nd motor stall prevention level]	30/150 [%]		150	X	
H88	[2nd motor Electronic thermal level for 1 min]	50/200 [%]		150	O	
H89	[2nd motor Electronic thermal level for continuous]			100	O	
H90	[2nd motor rated current]	0.1/20 [A]		1.8	X	
H93	[Parameter initialize]	0/5	▪ This parameter is used to initialize parameters back to the factory default values. 0 - 1 All parameter groups are initialized to factory default value. 2 Only Drive group is initialized. 3 Only Function group 1 is initialized. 4 Only Function group 2 is initialized. 5 Only I/O group is initialized.	0	X	10-17
H94	[Password register]	0/FFF	Password for H95-[Parameter lock].	0	O	10-18

Function group 2

LED display	Parameter Name	Min/Max Range	Description		Factory defaults	Adjustable during run	Page
H95	[Parameter lock]	0/FFF	This parameter is able to lock or unlock parameters by typing password registered in H94.		0	O	10-19
			UL (Unlock)	Parameter change enable			
			L (Lock)	Parameter change disable			

7.4 I/O group

LED display	Parameter name	Min/Max range	Description	Factory defaults	Adjustable during run	Page
I 0	[Jump code]	0/63	This parameter sets the code number to jump	1	O	5-5
I 1	[Filter time constant for V0 input]	0/9999	This is used to adjust the analog voltage input signal via keypad potentiometer.	10	O	9-2
I 2	[V0 input Min voltage]	0/10 [V]	Set the minimum voltage of the V0 input.	0	O	
I 3	[Frequency corresponding to I 2]	0/400 [Hz]	Set the inverter output minimum frequency at minimum voltage of the V0 input.	0.0	O	
I 4	[V0 input Max voltage]	0/10 [V]	Set the maximum voltage of the V0 input.	10	O	
I 5	[Frequency corresponding to I 4]	0/400 [Hz]	Set the inverter output maximum frequency at maximum voltage of the V0 input.	60.0	O	
I 6	[Filter time constant for V1 input]	0/9999	Set the input section's internal filter constant for V1 input.	10	O	9-3
I 7	[V1 input Min voltage]	0/10 [V]	Set the minimum voltage of the V1 input.	0	O	
I 8	[Frequency corresponding to I 7]	0/400 [Hz]	Set the inverter output minimum frequency at minimum voltage of the V1 input.	0.0	O	
I 9	[V1 input max voltage]	0/10 [V]	Set the maximum voltage of the V1 input.	10	O	
I10	[Frequency corresponding to I 9]	0/400 [Hz]	Set the inverter output maximum frequency at maximum voltage of the V1 input.	60.0	O	
I11	[Filter time constant for I input]	0/9999	Set the input section's internal filter constant for I input.	10	O	9-4
I12	[I input minimum current]	0/20 [mA]	Set the Minimum Current of I input.	4	O	

7.4 I/O group

LED display	Parameter name	Min/Max range	Description			Factory defaults	Adjustable during run	Page
I13	[Frequency corresponding to I 12]	0/400 [Hz]	Set the inverter output minimum frequency at minimum current of I input.			0.0	O	
I14	[I input max current]	0/20 [mA]	Set the Maximum Current of I input.			20	O	
I15	[Frequency corresponding to I 14]	0/400 [Hz]	Set the inverter output maximum frequency at maximum current of I input.			60.0	O	
I16	[Criteria for Analog Input Signal loss]	0/2	0	Disabled		0	O	12-7
			1	Less than half the value set in I 2/7/12 entered				
			2	Below the value set in I 2/7/12 entered				
I20	[Multi-function input terminal P1 define]	0/24	0	Forward run command {FX}		0	O	9-7
			1	Reverse run command {RX}				
I21	[Multi-function input terminal P2 define]		2	Emergency Stop Trip {EST}		1	O	
			3	Reset when a fault occurs {RST}.				
I22	[Multi-function input terminal P3 define]		4	Jog operation command {JOG}		2	O	10-3
			5	Multi-Step frequency – Low				9-6
I23	[Multi-function input terminal P4 define]		6	Multi-Step frequency – Mid		3	O	
			7	Multi-Step frequency – High				
I24	[Multi-function input terminal P5 define]		8	Multi Accel/Decel – Low		4	O	9-12
			9	Multi Accel/Decel – Mid				
			10	Multi Accel/Decel – High				
			11	DC brake during stop				10-2
			12	2nd motor select				10-16
			13	-				
			14	-				
			15	Up-down operation	Frequency increase command (UP)			10-4

7.4 I/O group

LED display	Parameter name	Min/Max range	Description					Factory defaults	Adjustable during run	Page
			16			Frequency decrease command (DOWN)				
			17	3-wire operation						10-4
			18	External trip: A Contact (EtA)						12-5
			19	External trip: B Contact (EtB)						
			20	-						
			21	Exchange between PID operation and V/F operation						10-8
			22	Exchange between option and Inverter						
			23	Analog Hold						
			24	Accel/Decel Disable						
I25	[Input terminal status display]		BIT4	BIT3	BIT2	BIT1	BIT0	-	-	11-3
			P5	P4	P3	P2	P1			
I26	[Output terminal status display]					BIT1	BIT0			11-3
						30AC	MO			
I27	[Filtering time constant for Multi-function Input terminal]	2/50	▪ If the value is set higher, the response of the Input terminal is getting slower.					15	O	
I30	[Multi-Step frequency 4]	0/400 [Hz]	▪ It cannot be set greater than F21 – [Max frequency].					30.0	O	9-6
I31	[Multi-Step frequency 5]							25.0	O	
I32	[Multi-Step frequency 6]							20.0	O	
I33	[Multi-Step frequency 7]							15.0	O	
I34	[Multi-Accel time 1]	0/6000 [sec]						3.0	O	9-12
I35	[Multi-Decel time 1]							3.0		

WALTHER FLENDER®
ANTRIEBSTECHNIK

7.4 I/O group

LED display	Parameter name	Min/Max range	Description			Factory defaults	Adjustable during run	Page
I36	[Multi-Accel time 2]					4.0		9-12
I37	[Multi-Decel time 2]					4.0		
I38	[Multi-Accel time 3]					5.0		
I39	[Multi-Decel time 3]					5.0		
I40	[Multi-Accel time 4]					6.0		
I41	[Multi-Decel time 4]					6.0		
I42	[Multi-Accel time 5]					7.0		
I43	[Multi-Decel time 5]					7.0		
I44	[Multi-Accel time 6]					8.0		
I45	[Multi-Decel time 6]					8.0		
I46	[Multi-Accel time 7]					9.0		
I47	[Multi-Decel time 7]					9.0		
I50	[Analog output item select]	0/3			10[V] Output	0	O	11-5
			0	Output frequency	Max frequency			
			1	Output current	150 %			
			2	Output voltage	282 V			
			3	DC link voltage	DC 400V			
I51	[Analog output level adjustment]	10/200 [%]				100	O	

7.4 I/O group

LED display	Parameter name	Min/Max range	Description				Factory defaults	Adjustable during run	Page
I52	[Frequency detection level]	0/400 [Hz]	▪ This parameter is used when I54 – [Multi-function output terminal select] or I55 – [Multi-function relay select] are set to 0-4. ▪ It cannot be set greater than F21 – [Max frequency].				30.0	O	11-6
I53	[Frequency detection bandwidth]						10.0	O	
I54	[Multi-function output terminal select]	0/17	0	FDT-1			12	O	11-6
			1	FDT-2					11-6
I55	[Multi-function relay select]		2	FDT-3			17		11-8
			3	FDT-4					11-8
			4	FDT-5					11-9
			5	Overload {OL}					11-9
			6	Inverter Overload {IOL}					
			7	Motor stall {STALL}					
			8	Over voltage trip {OV}					
			9	Low voltage trip {LV}					
			10	Inverter cooling fan overheat {OH}					
			11	Command loss					
			12	During run					11-10
			13	During stop					
			14	During constant run					
			15	During speed searching					
			16	Wait time for run signal input					
			17	Fault relay output					
I56	[Fault relay output]	0/7		When setting the H26–[Number of auto restart try]	When the trip other than low voltage trip occurs	When the low voltage trip occurs	2	O	11-6
				Bit 2	Bit 1	Bit 0			
			0	-	-	-			

7.4 I/O group

LED display	Parameter name	Min/Max range	Description	Factory defaults	Adjustable during run	Page
			1 - - ✓ 2 - ✓ - 3 - ✓ ✓ 4 ✓ - - 5 ✓ - ✓ 6 ✓ ✓ - 7 ✓ ✓ ✓			
I60	[Inverter station number]	1/32	▪ This parameter is set when the inverter uses RS485 communication option.	1	O	
I61	[Baud rate]	0/4	▪ Select the Baud rate of the RS485 0 1200 bps 1 2400 bps 2 4800 bps 3 9600 bps 4 19200 bps	3	O	
I62	[Drive mode select after loss of frequency command]	0/2	▪ It is used when frequency command is given via V1 and I terminal or communication option. 0 Continuous operation 1 Free Run stop (Coast to stop) 2 Decel to stop	0	O	12-7
I63	[Wait time after loss of frequency command	0.1/12 [sec]	▪ This is the time inverter determines whether there is the input frequency command or not. If there is no frequency command input during this time, inverter starts operation via the mode selected at I62.	1.0	-	

WALTHER FLENDER®
ANTRIEBSTECHNIK

Notes:

8 Control block diagram

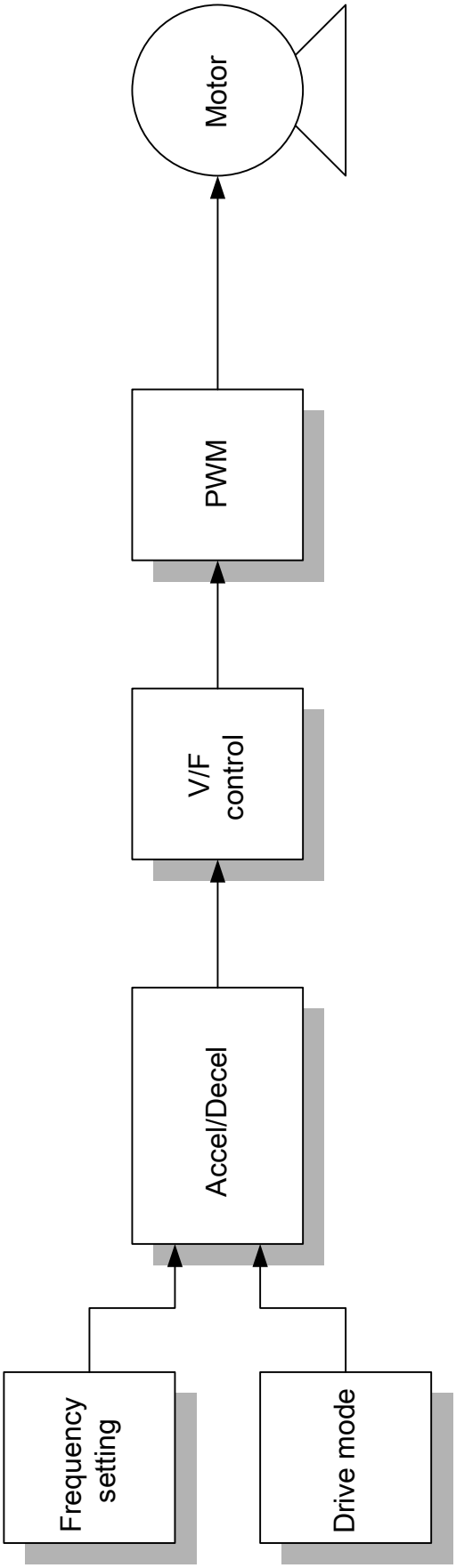

WALTHER FLENDER®
ANTRIEBSTECHNIK

8.1 Frequency and Drive mode setting

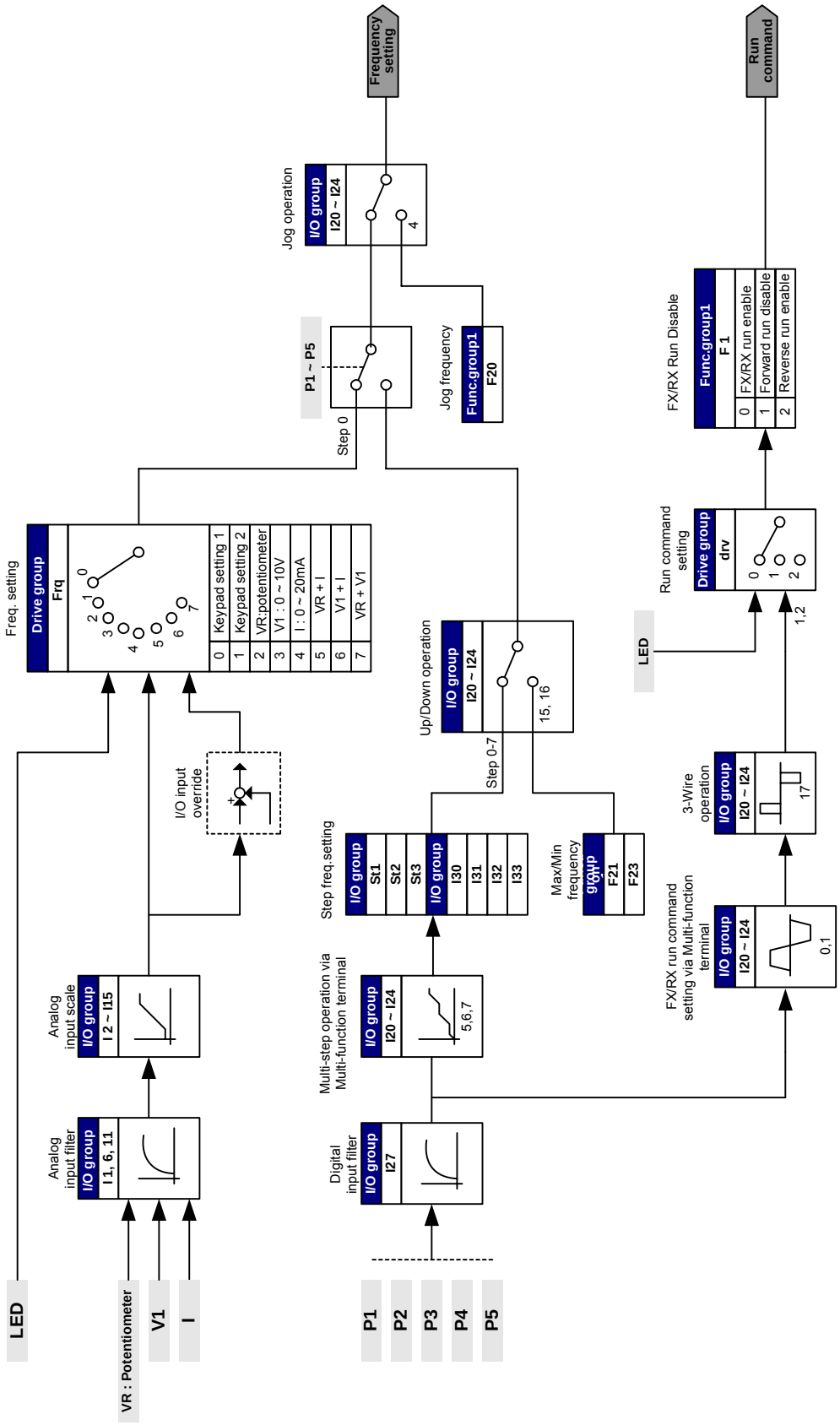

WALTHER FLENDER®
ANTRIEBSTECHNIK

8.2 Accel/Decel setting and V/F control

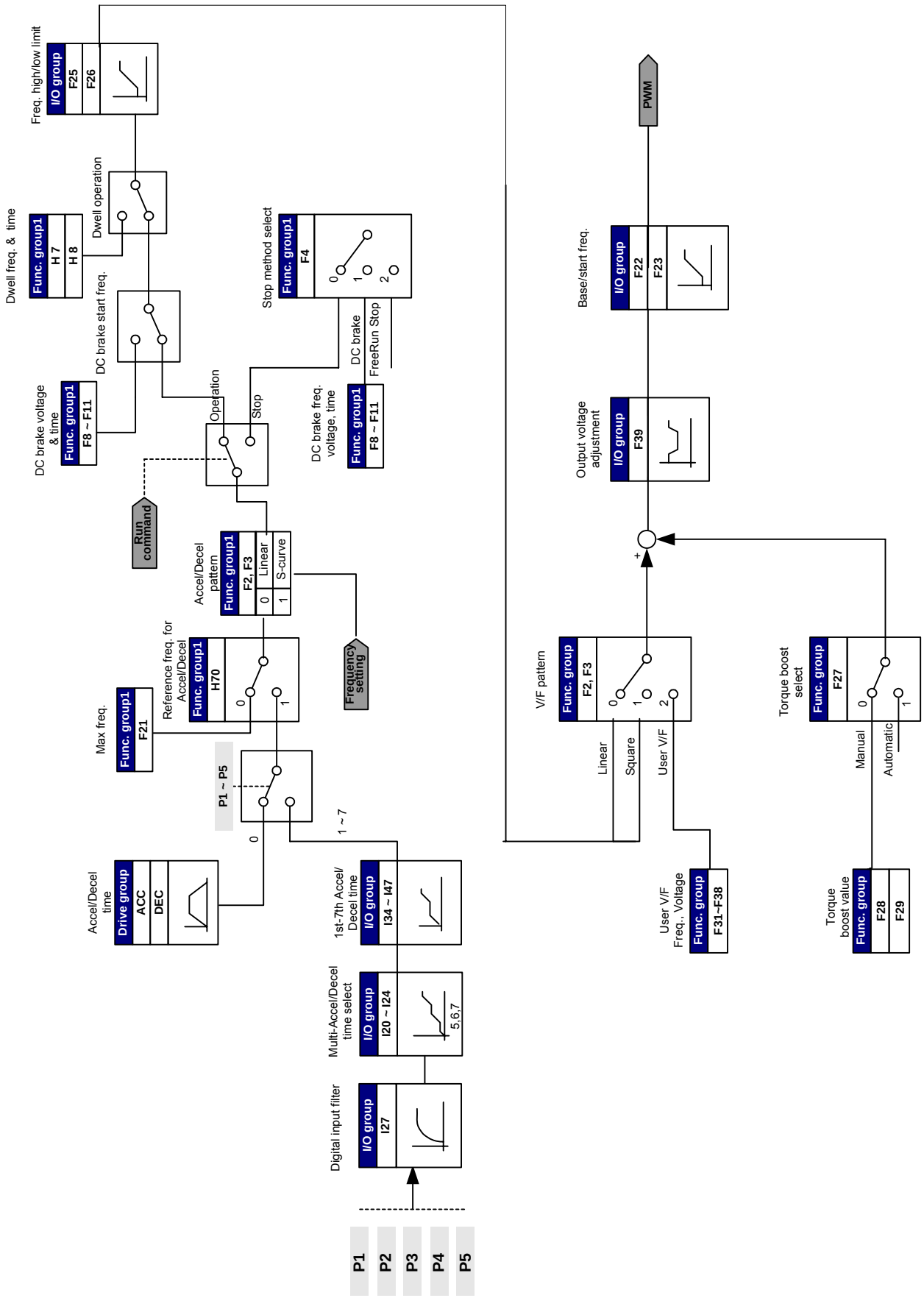

WALTHER FLENDER®
ANTRIEBSTECHNIK

9 Basic Functions

9.1 Frequency mode

- Digital Frequency setting via Keypad 1

Group	LED Display	Parameter Name	Set Value	Min/Max Range	Factory Defaults	Unit
Drive group	0.0	[Frequency Command]	-	0/400	0.0	Hz
	Frq	[Frequency mode]	0	0/8	0	

- Run frequency is settable in **0.0** - [Frequency Command].
- Set **Frq** – [Frequency mode] to 0 {Frequency setting via Keypad 1}.
- Set the desired frequency in **0.0** and press the Prog/Ent (●) key to enter the value into memory.
- The value is settable not greater than **F21** – [Max frequency].

- Digital Frequency setting via Keypad 2

Group	LED Display	Parameter Name	Set Value	Min/Max Range	Factory Defaults	Unit
Drive group	0.0	[Frequency Command]	-	0/400	0.0	Hz
	Frq	[Frequency mode]	1	0/8	0	

- Run frequency is settable in **0.0** - [Frequency Command].
- Set **Frq** – [Frequency mode] to 1{Frequency setting via Keypad 2}.
- In **0.0**, frequency is changed upon pressing the Up (▲)/Down (▼) key. It is seleted to use the Up/Down key as potentiometer on keypad.
- The value is settable not greater than **F21** – [Max frequency].

- Analog Frequency setting via Potentiometer (V0) on the Keypad

Used to prevent fluctuations in analog input signals caused by noise

Group	LED Display	Parameter Name	Set Value	Min/Max Range	Factory Defaults	Unit
Drive group	0.0	[Frequency Command]	-	-	-	Hz
	Frq	[Frequency Mode]	2	0/8	0	
I/O group	I 1	[Filter time constant for V0 input]	10	0/9999	10	
	I 2	[V0 input minimum voltage]	-	0/10	0	V
	I 3	[Frequency corresponding to I2]	-	0/400	0.0	Hz
	I 4	[V0 input max voltage]	-	0/10	10	V
	I 5	[Frequency corresponding to I4]	-	0/400	60.0	Hz

- Set **Frq** – [Frequency Mode] to 2.
- The set frequency can be monitored in **0.0**- [Frequency Command].

▶ I 1 : [Filtering time constant for V0 input]

Effective for eliminating noise in the frequency setting circuit.

Increase the filter time constant if steady operation cannot be performed due to noise. A larger setting results in slower response (t gets longer).

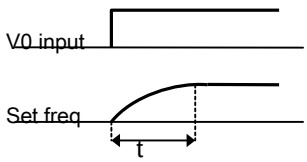

▶ I 2 - I 5 : [Min/Max input voltage and corresponding frequency setting]

The corresponding frequency to V0 input voltage is settable.

Example: When setting I 2 - [V0 input minimum voltage] = 2V, I 3- [Frequency corresponding to I 2]= 10Hz, I 4 - [V0 input max voltage] = 8V and I 5 - [Frequency corresponding to I 4]= 50Hz, the following figure is shown.

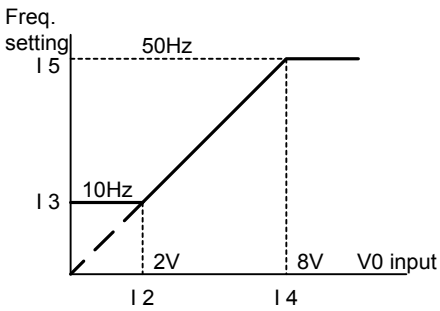

WALTHER FLENDER®
ANTRIEBSTECHNIK

- Analog Frequency setting via Voltage analog input (0-10V) or potentiometer on the VR terminal

Group	LED Display	Parameter Name	Set Value	Min/Max Range	Factory Defaults	Unit
Drive group	0.0	[Frequency command]	-	-	-	Hz
	Frq	[Frequency mode]	3	0/8	0	
I/O group	I 6	[Filtering time constant for V1 input]	10	0/9999	10	
	I 7	[V1 input minimum voltage]	-	0/10	0	V
	I 8	[Frequency corresponding to I 7]	-	0/400	0.0	Hz
	I 9	[V1 input max voltage]	-	0/10	10	V
	I10	[Frequency corresponding to I 9]	-	0/400	60.0	Hz

- Select **Frq** -[Frequency Mode] to 3 {Frequency setting via V1 terminal}.
- The 0-10V input can be directly applied from an external controller or a potentiometer (between VR and CM terminals).

▶ Wire the terminal as shown below and refer to page 9-2 for I 6 - I10.

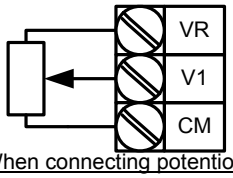

When connecting potentiometer to terminals VR and CM

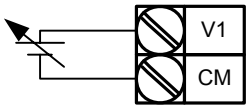

Analog Voltage Input (0-10V)

- Frequency Setting via Analog Current Input (0-20mA)

Group	LED Display	Parameter Name	Set Value	Min/Max Range	Factory Defaults	Unit
Drive group	0.0	[Frequency Command]	-	-	-	Hz
	Frq	[Frequency Mode]	4	0/8	0	
I/O group	I11	[Filtering time constant for I input]	10	0/9999	10	
	I12	[I input minimum current]	-	0/20	4	mA
	I13	[Frequency corresponding to I 12]	-	0/400	0.0	Hz
	I14	[I input max current]	-	0/20	20	mA
	I15	[Frequency corresponding to I 14]	-	0/400	60.0	Hz

- Select **Frq** – [Frequency Mode] to 4 {Current Analog Input (0-20mA)}.
- Frequency is set via 0-20mA input between I and CM terminals.
- See page 9-2 for I11-I15.

- Frequency setting via Potentiometer on the keypad + Current Analog input (0-20mA)

Group	LED Display	Parameter Name	Set Value	Min/Max Range	Factory Defaults	Unit
Drive group	0.0	[Frequency Command]	-	-	-	Hz
	Frq	[Frequency Mode]	5	0/8	0	

- Select Frq – [Frequency Mode] to 5 {Potentiometer on the keypad and Current Analog input (0-20mA)}.
- Override function is provided via Main speed and Auxiliary speed adjustment.
- Related code : I 1 - I 5, I 11- I 15

▶ When main speed is set via potentiometer and Auxiliary speed via 0-20mA analog input, the override function is set as below.

Group	Code	Parameter Name	Set value	Units
I/O group	I 2	[V0 input minimum voltage]	0	V
	I 3	[Frequency corresponding to I 2]	0	Hz
	I 4	[V0 input max voltage]	10	V
	I 5	[Frequency corresponding to I 4]	60.0	Hz
	I 12	[I input minimum current]	4	mA
	I 13	[Frequency corresponding to I 12]	0	Hz
	I 14	[I input max current]	20	mA
	I 15	[Frequency corresponding to I 14]	5.0	Hz

After the above setting is made, if 5V is set via potentiometer and 10mA is applied via I terminal, 32.5Hz is output

- Frequency setting via 0-10V + 0-20mA input

Group	LED Display	Parameter Name	Set Value	Min/Max Range	Factory Defaults	Unit
Drive group	0.0	[Frequency Command]	-	-	-	Hz
	Frq	[Frequency Mode]	6	0/8	0	

- Set **Frq** – [Frequency Mode] to 6 {V1 + I terminal input}.
- Related code : I 6 - I 10, I 11 - I 15
- Refer to the Frequency setting via Potentiometer on the keypad + Current Analog input (0-20mA) for the setting.

- Frequency setting via Potentiometer on the keypad + 0-10V input

Group	LED Display	Parameter Name	Set Value	Min/Max Range	Factory Defaults	Unit
Drive group	0.0	[Frequency Command]	-	-	-	Hz
	Frq	[Frequency Mode]	7	0/8	0	

- Set **Frq** – [Frequency Mode] to 7 {Potentiometer on the keypad + 0-10V input}.
- Relative code: I 1 - I 5, I6 - I10
- Refer to P 9-4 Frequency setting via potentiometer on the Keypad + 0-20mA input for the setting.

- Analog Hold

Group	LED Display	Parameter Name	Set Value	Min/Max Range	Factory Defaults	Unit
Drive group	Frq	[Frequency Mode]	2/7	0/8	0	
I/O group	I20	[Multi-function input terminal P1 define]	-	0/24	0	
	~	~				
	I24	[Multi-function input Terminal P5 Define]	23		4	

- This setting becomes activated when **Frq** – [Frequency Mode] is set to 2-7.
- **<u>Set one of the Multi-function input terminals to 23 to activate Analog Hold operation.</u>**

▸ When I24 –[Multi-function input terminal P5 define] is set to 23,

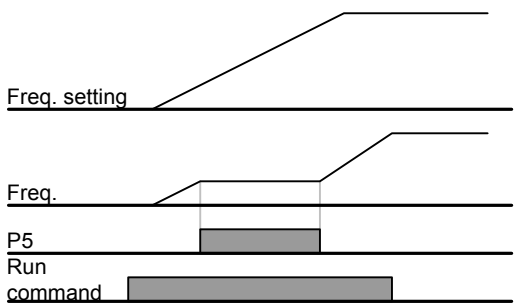

WALTHER FLENDER®
ANTRIEBSTECHNIK

9.2 Multi-Step frequency setting

Group	LED Display	Parameter Name	Set Value	Min/Max Range	Factory Defaults	Unit
Drive group	0.0	[Frequency command]	5.0	0/400	0.0	Hz
	Frq	[Frq mode]	0	0/8	0	-
	St1	[Multi-Step frequency 1]	-	0/400	10.0	Hz
	St2	[Multi-Step frequency 2]	-		20.0	
	St3	[Multi-Step frequency 3]	-		30.0	
I/O group	I22	[Multi-function input terminal P3 define]	5	0/24	2	-
	I23	[Multi-function input terminal P4 define]	6		3	-
	I24	[Multi-function input terminal P5 define]	7		4	-
	I30	[Multi-Step frequency 4]	-	0/400	30.0	Hz
	I31	[Multi-Step frequency 5]	-		25.0	
	I32	[Multi-Step frequency 6]	-		20.0	
	I33	[Multi-Step frequency 7]	-		15.0	

- Select a terminal to give Multi-step frequency command among P1-P5 terminals.
- If terminals P3-P5 are selected for this setting, set I22-I24 to 5-7 to give Multi-step frequency command.
- Multi-step frequency 0 is settable using **Frq** – [Frequency mode] and **0.0** – [Frequency command].
- Multi-step frequency 1-3 are set at St1-St3 in Drive group, while Step frequency 4-7 are set at I30-I33 in I/O group.

Step freq	FX or RX	P5	P4	P3
0	✓	-	-	-
1	✓	-	-	✓
2	✓	-	✓	-
3	✓	-	✓	✓
4	✓	✓	-	-
5	✓	✓	-	✓
6	✓	✓	✓	-
7	✓	✓	✓	✓

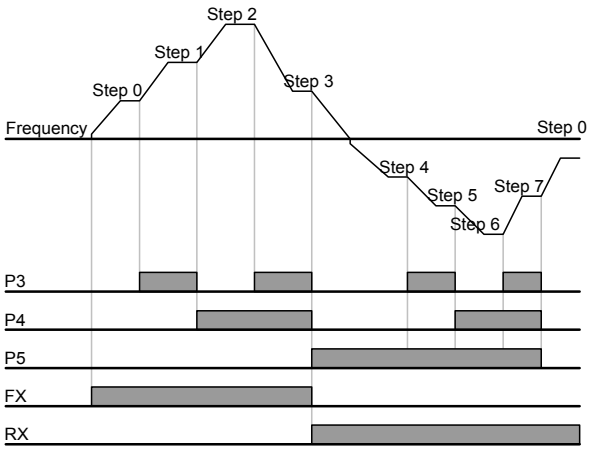

WALTHER FLENDER®
ANTRIEBSTECHNIK

9.3 Run Command setting

- Run via the Run and STOP/RST key

Group	LED Display	Parameter Name	Set Value	Min/Max Range	Factory Defaults	Unit
Drive group	drv	[Drive mode] (Run/Stop mode)	0	0/3	1	
	drC	[Direction of motor rotation select]	-	F/r	F	

- Set **drv** – [Drive mode] to 0.
- Motor starts to accelerate by pressing the Run key while run frequency is set. Motor decelerates to stop by pressing the STOP/RST key.
- Selecting rotation direction is available at **drC** - [Direction of motor rotation select] when run command is issued via Run key on keypad.

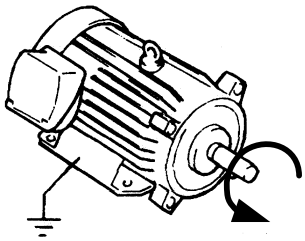

FX : Counter clockwise

drC	[Direction of motor rotation select]	F	Forward
		R	Reverse

- Run command setting 1 via FX and RX terminals

Group	LED Display	Parameter Name	Set Value	Min/Max Range	Factory Defaults	Unit
Drive group	drv	[Drive mode] (Run/Stop mode)	1	0/3	1	
I/O group	I20	[Multi-function input terminal P1 define]	0	0/24	0	
	I21	[Multi-function input terminal P2 define]	1	0/24	1	

- Set **drv** – [Drive mode] to 1.
- Set I20 and I21 to 0 and 1 to use P1 and P2 as FX and RX terminals.
- “FX” is Forward run command and “RX” Reverse run.

▸ Operation will stop when both FX and RX terminals are turned ON or OFF.

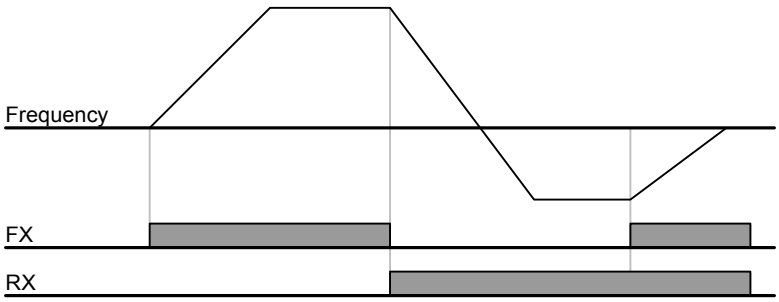

WALTHER FLENDER®
ANTRIEBSTECHNIK

- Run command setting 2 at FX and RX terminals

Group	LED Display	Parameter Name	Set Value	Min/Max Range	Factory Defaults	Unit
Drive group	drv	[Drive mode] (Run/Stop mode)	2	0/3	1	
I/O group	I20	[Multi-function input terminal P1 define]	0	0/24	0	
	I21	[Multi-function input terminal P2 define]	1	0/24	1	

- Set the **drv** to 2.
- Set I20 and I21 to 0 and 1 to use P1 and P2 as FX and RX terminals.
- FX: Run command setting. Motor runs in forward direction when RX terminal (P2) is OFF.
- RX: Direction of motor rotation select. Motor runs in reverse direction when RX terminal (P2) is ON.

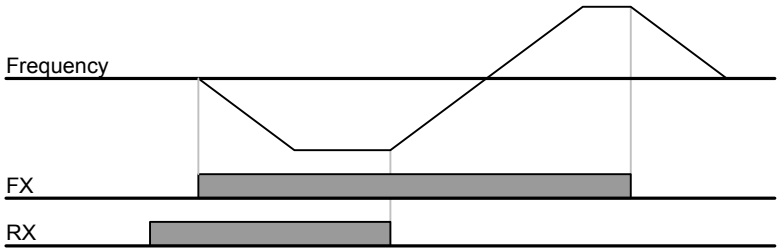

- FX/RX Run Disable

Group	LED Display	Parameter Name	Set Value	Min/Max Range	Factory Defaults	Unit
Drive group	drC	[Direction of motor rotation select]	-	F/r	F	
Function group 1	F 1	[Forward/Reverse run disable]	-	0/2	0	

Select the direction of motor rotation.

- 0 : Forward and Reverse run enable
- 1 : Forward run disable
- 2 : Reverse run disable

WALTHER FLENDER®
ANTRIEBSTECHNIK

- Power On Start select

Group	LED Display	Parameter Name	Set Value	Min/Max Range	Factory Defaults	Unit
Drive group	drv	[Drive mode] (Run/Stop mode)	1, 2	0/3	1	
Function group 2	H20	[Power On Start select]	1	0/1	0	

- Set H20 to 1.
- When AC input power is applied to the inverter with drv set to 1 or 2 {Run via control terminal}, motor starts acceleration.
- This parameter is inactive when the drv is set to 0 {Run via keypad}.

⚠ CAUTION

Particular attention must be directed to this function due to potential hazard as motor starts to run suddenly upon applying AC input power.

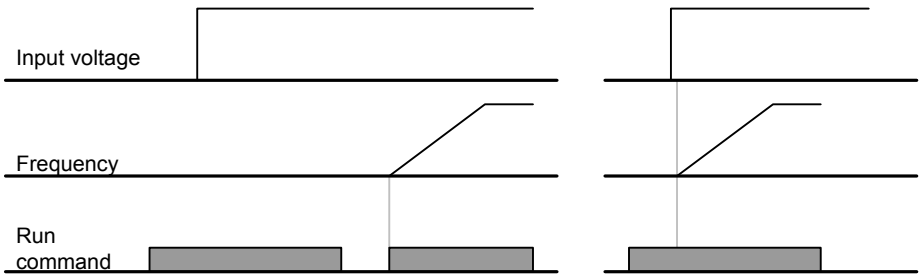

When H20 is 0 When H20 is 1

- Restart after fault reset

Group	LED display	Parametern name	Set value	Min/Max range	Factory defaults	Unit
Drive group	Drv	[Drive mode] (Run/Stop mode)	1, 2	0/3	1	
Function group 2	H21	[Restart after fault reset]	1	0/1	0	

- Set H21 to 1.
- Motor starts acceleration if **drv** is set to 1 or 2 and the selected terminal is ON when a fault is cleared.
- This function is inactive when the **drv** is set to 0 {Run via the Keypad}.

⚠ CAUTION

Particular attention must be directed to this function due to potential hazard as motor starts to run suddenly after the fault is cleared.

WALTHER FLENDER® ANTRIEBSTECHNIK

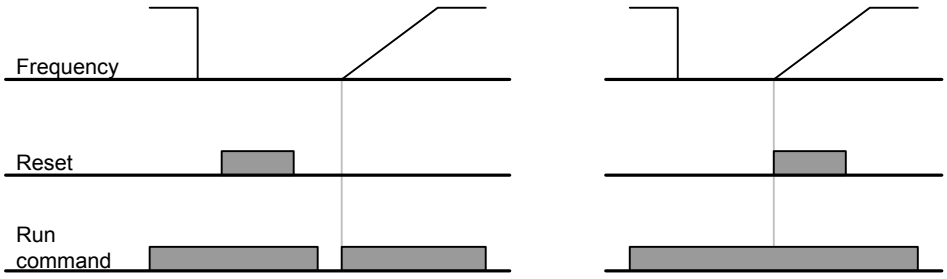

When H21 is 0 When H21 is 1

9.4 Accel/Decel time and unit setting

- Accel/Decel time setting based on Max frequency

Group	LED Display	Parameter Name	Set Value	Min/Max Range	Factory Defaults	Unit
Drive group	ACC	[Accel time]	-	0/6000	5.0	sec
	dEC	[Decel time]	-	0/6000	10.0	sec
Function group 1	F21	[Max frequency]	-	0/400	60.0	Hz
Function group 2	H70	[Frequency Reference for Accel/Decel]	0	0/1	0	
	H71	[Accel/Decel Time setting unit]	-	0/2	1	

- Set the desired Accel/Decel time at ACC/dEC in Drive group.
- If H70 is set to 0 {Max frequency}, Accel/Decel time is the time that takes to reach the max freq from 0 Hz.
- Desired Accel/Decel time unit is settable at the H71.

▸ Accel/Decel time is set based on **F21** – [Max frequency]. For instance, if **F21** is set to 60Hz, Accel/Decel time 5 sec, and run frequency 30Hz, time to reach 30Hz would be 2.5 sec.

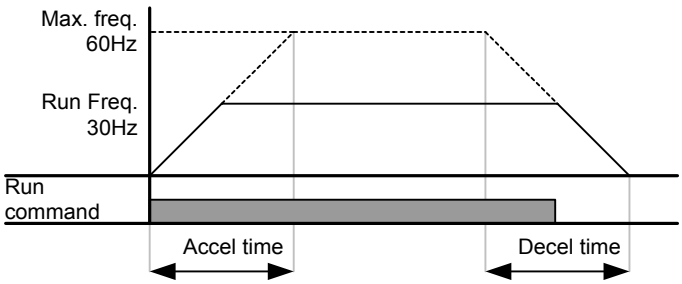

WALTHER FLENDER®
ANTRIEBSTECHNIK

▶ More precise time unit can be set corresponding to load characteristics as shown below.

Code	Parameter Name	Setting range	Set value	Description
H71	[Accel/Decel Time setting unit]	0.01~600.00	0	Unit: 0.01 sec.
		0.1~6000.0	1	Unit: 0.1 sec.
		1~60000	2	Unit: 1 sec.

● Accel/Decel time based on Run frequency

Group	LED display	Parameter name	Set value	Min/Max range	Factory defaults	Unit
Drive group	ACC	[Accel time]	-	0/6000	5.0	sec
	dEC	[Decel time]	-	0/6000	10.0	sec
Function group 2	H70	[Frequency reference for Accel/Decel]	1	0/1	0	

- Accel/Decel time is set at the **ACC/dEC**.
- If you set H70 to 1 {Delta frequency}, Accel/Decel time is the time that takes to reach a target freq from run freq (Currently operating freq.).

▶ When H70 and Accel time are set to 1 {Delta frequency} and 5 sec, respectively,
(A zone: run freq 10 Hz applied first, B zone: Operating via 10 Hz, different run freq is not issued
C: 30Hz Run freq (in this case, Target freq) issued while 10 Hz run freq is applied. But the preset accel time 5 sec is maintained.)

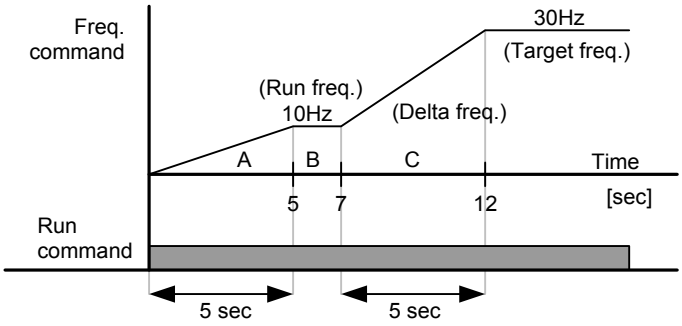

WALTHER FLENDER®
ANTRIEBSTECHNIK

- Multi-Accel/Decel time setting via Multi-function terminals

Group	LED Display	Parameter Name	Set Value	Min/Max Range	Factory Defaults	Unit
Drive group	ACC	[Accel time]	-	0/6000	5.0	Sec
	dEC	[Decel time]	-	0/6000	10.0	Sec
I/O group	I20	[Multi-function input terminal P1 define]	0	0/24	0	
	I21	[Multi-function input terminal P2 define]	1		1	
	I22	[Multi-function input terminal P3 define]	8		2	
	I23	[Multi-function input terminal P4 define]	9		3	
	I24	[Multi-function input terminal P5 define]	10		4	
	I34	[Multi-Accel time 1]	-	0/6000	3.0	Sec
	~	~				
	I47	[Multi-Decel time 7]	-		9.0	

- Set I22, I23, I24 to 8, 9, 10 if you want to set Multi - Accel/Decel time via P3-P5 terminals.
- Multi-Accel/Decel time 0 is settable at ACC and dEC.
- Multi-Accel/Decel time 1-7 is settable at I34-I47.

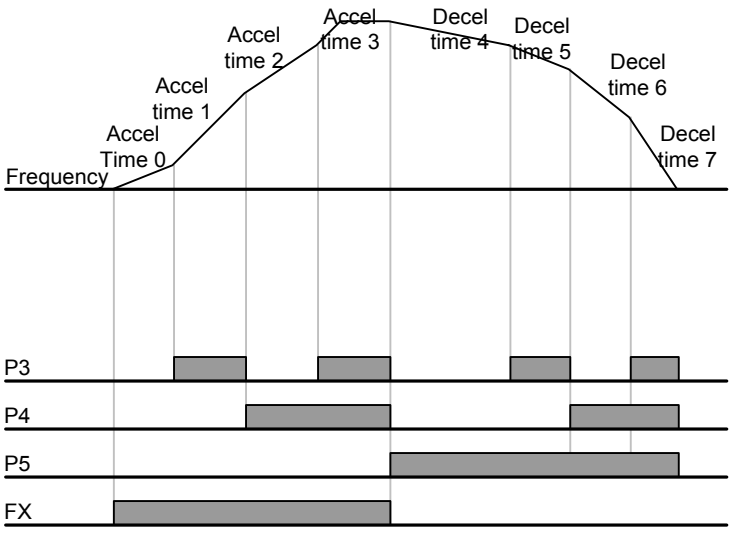

Multi-Accel/Decel time	P5	P4	P3
0	-	-	-
1	-	-	✓
2	-	✓	-
3	-	✓	✓
4	✓	-	-
5	✓	-	✓
6	✓	✓	-
7	✓	✓	✓

WALTHER FLENDER®
ANTRIEBSTECHNIK

- Accel/Decel pattern setting

Group	LED display	Parameter name	Min/Max range		Set value	Unit
Function group 1	F 2	[Accel pattern]	0	Linear	0	
	F 3	[Decel pattern]	1	S-curve		
	H17	S-Curve accel/decel start side	1~100		40	%
	H18	S-Curve accel/decel end side			40	%

- Accel/Decel pattern is settable at F2 and F3.
- Linear : This is a general pattern for constant torque applications
- S-curve : This curve allows the motor to accelerate and decelerate smoothly.
  Appropriate applications: Elevator door, lifts..

☞ **Caution :**

- For S-curve, the actual Accel/Decel time takes longer than the time set by user.

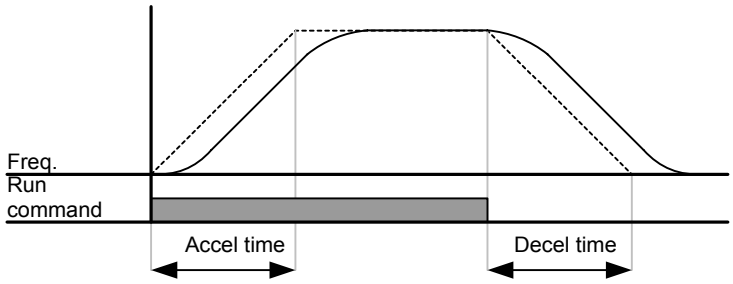

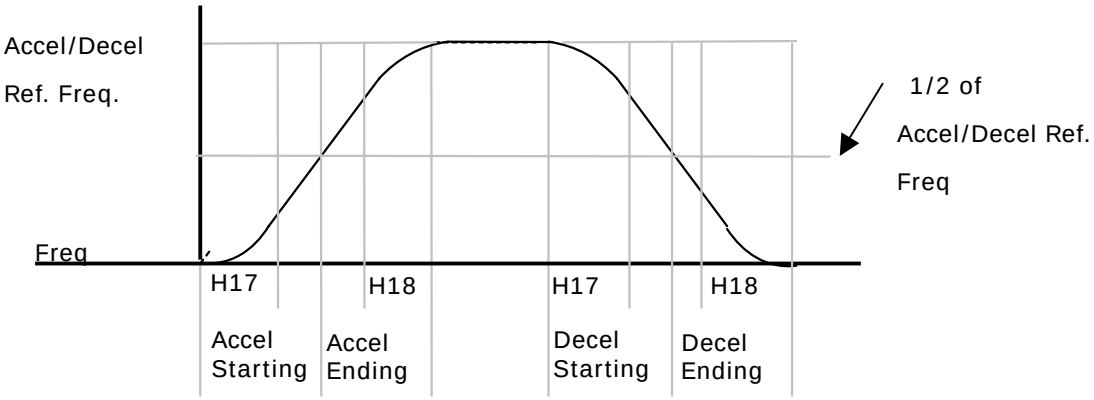

WALTHER FLENDER®
ANTRIEBSTECHNIK

Note that setting Frequency Ref for Accel/decel (H70) is set to Max Freq and target freq is set below Max freq. the shape of S-curve may be distorted.

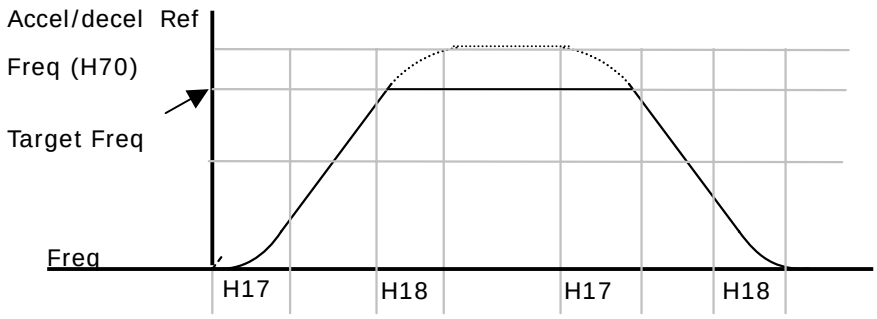

☞Note: If set target freqis below Max freq, the curve will not be shown completely.

- Accel/Decel Disable

Group	LED display	Parameter name	Set value	Min/Max range	Factory defaults	Unit
I/O group	I20	[Multi-function input terminal P1 define]	-	0/24	0	
	~	~				
	I24	[Multi-function input terminal P5 define]	24		4	

- Select one terminal of I20-24 to define Accel/Decel disable.
- For example, if P5 is selected, set I24 to 24 to activate this function.

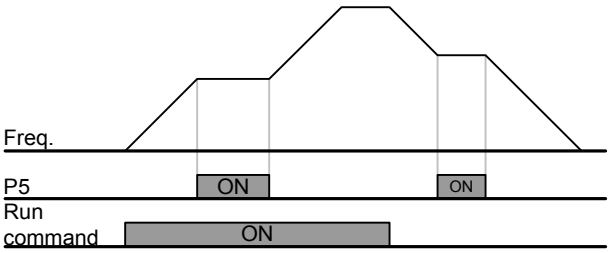

WALTHER FLENDER®
ANTRIEBSTECHNIK

9.5 V/F control

- Linear V/F operation

Group	LED Display	Parameter Name	Set Value	Min/Max Range	Factory Defaults	Unit
Function group 1	F22	[Base frequency]	-	30/400	60.0	Hz
	F23	[Start frequency]	-	0/10.0	0.5	Hz
	F30	[V/F pattern]	0	0/2	0	

- Set F30 to 0 {Linear}.
- This pattern maintains a linear Volts/frequency ratio from F23 - [Start frequency] to F22- [Base frequency]. This is appropriate for constant torque applications.

  - F22 – [Base frequency] : Inverter outputs its rated voltage at this level. Enter the motor nameplate frequency.
  - F23 – [Start frequency] : Inverter starts to output its voltage at this level.

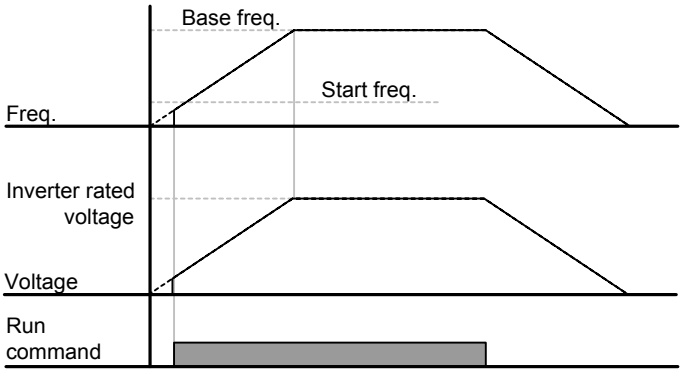

- Square V/F operation

Group	LED Display	Parameter Name	Set Value	Min/Max Range	Factory Defaults	Unit
Function group 1	F30	[V/F pattern]	1	0/2	0	

- Set F30 to 1{Square}.
- This pattern maintains squared volts/hertz ratio. Appropriate applications are fans, pumps, etc.

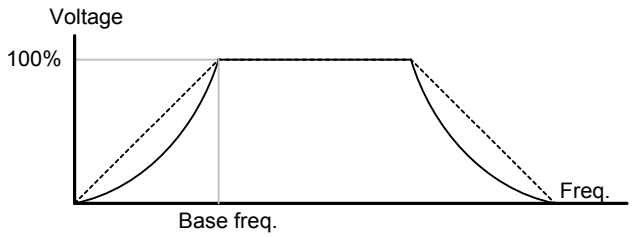

WALTHER FLENDER®
ANTRIEBSTECHNIK

- User V/F pattern

Group	LED display	Parametername	Set value	Min/Max range	Factory defaults	Unit
Function group 1	F30	[V/F pattern]	2	0/2	0	
	F31	[User V/F frequency 1]	-	0/400	15.0	Hz
	~	~				
	F38	[User V/F voltage 4]	-	0/100	100	%

- Select F30 to 2 {User V/F}.
- User can adjust the Volt/Frequency ratio according to V/F pattern of specialized motors and load characteristics.

⚠ CAUTION

- In case of using a standard induction motor, if this value is set much higher than linear V/F pattern, it could result in torque shortage or motor overheating due to over-energizing.
- When User V/F pattern is active, F28 - [Torque Boost in forward direction] and F29 - [Torque Boost in reverse direction] are deactivated.

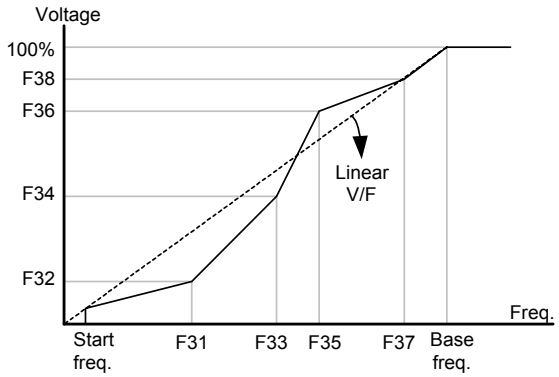

- Output voltage adjustment

Group	LED Display	Parameter Name	Set Value	Min/Max Range	Factory Defaults	Unit
Function group 1	F39	[Output voltage adjustment]	-	40/110	100	%

- This function is used to adjust the output voltage of the inverter. This is useful when you use a motor that has a rated voltage lower than the input voltage.

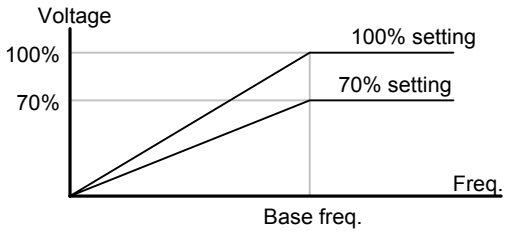

WALTHER FLENDER®
ANTRIEBSTECHNIK

- Manual Torque Boost

Group	LED display	Parameter name	Set Value	Min/Max range	Factory defaults	Unit
Function group 1	F27	[Torque boost select]	0	0/1	0	
	F28	[Torque boost in forward direction]	-	0/15	5	%
	F29	[Torque boost in reverse direction]				

- Set F27 to 0 {Manual torque boost}.
- The values of [Torque boost in forward/reverse direction] are set separately in F28 and F29.

⚠ CAUTION

- If the boost value is set much higher than required, it may cause motor overheating due to over-energizing.

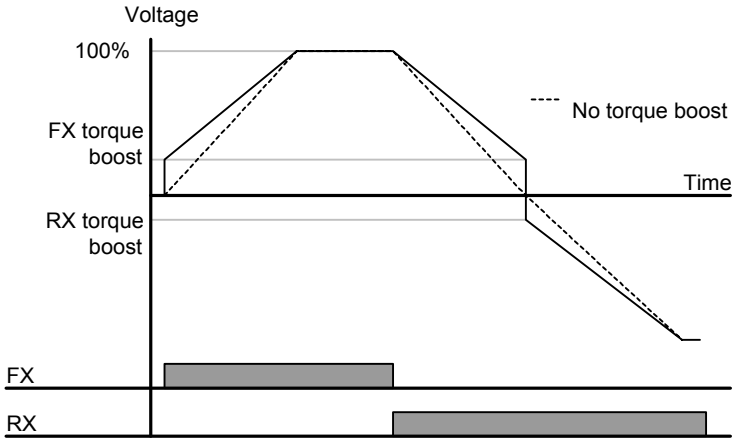

- Auto Torque Boost

Group	LED Display	Parameter Name	Set Value	Min/Max Range	Factory Defaults	Unit
Function group 1	F27	[Torque boost select]	1	0/1	0	
Function group 2	H34	[No Load Motor Current]	-	0.1/12	-	A
	H41	[Auto tuning]	0	0/1	0	
	H42	[Stator resistance (Rs)]	-	0/5.0	-	Ω

- Before Auto Torque Boost setting, H34 and H42 should be set correctly (See page 10-6, 10-8).
- Set F27 to 1 {Auto torque boost}.
- The inverter automatically boosts the output voltage by calculating torque boost value using motor parameters.

WALTHER FLENDER®
ANTRIEBSTECHNIK

9.6 Stop mode select

- Decel to stop

Group	LED Display	Parameter Name	Set Value	Min/Max Range	Factory Defaults	Unit
Function group 1	F4	[Stop mode select]	0	0/2	0	

- Set F30 to 0 {Decel to stop}.
- The inverter decelerates to 0Hz for the preset time.

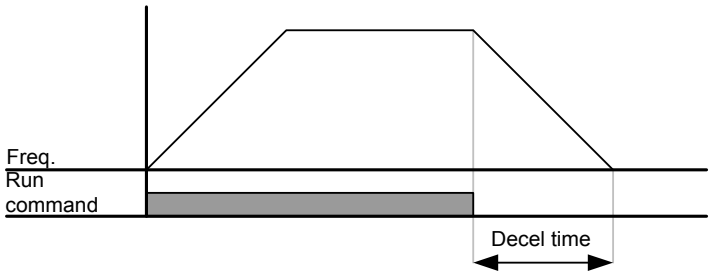

- DC brake to stop

Group	LED Display	Parameter Name	Set Value	Min/Max Range	Factory Defaults	Unit
Function group 1	F4	[Stop mode select]	1	0/2	0	

- Set F30 to 1 {DC brake to stop} (See page 10-1 for more).

- Free run to stop

Group	LED Display	Parameter Name	Set Value	Min/Max Range	Factory Defaults	Unit
Function group 1	F4	[Stop mode select]	2	0/2	0	

- Set F30 to 2 {Free run to stop}.
- The inverter turns off the output frequency and voltage when the run command is OFF.

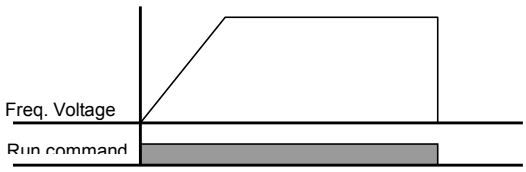

WALTHER FLENDER®
ANTRIEBSTECHNIK

9.7 Frequency limit setting

- Frequency limit setting based on Max and start frequency

Group	LED display	Parameter name	Set value	Min/Max range	Factory defaults	Unit
Function group 1	F21	[Max frequency]	-	0/400	60.0	Hz
	F23	[Start frequency]	-	0/10	0.5	Hz

- Max frequency: Frequency high limit except for F22 [Base frequency]. Any frequency cannot be set above [Max frequency].
- Start frequency: Frequency low limit. If a frequency is set lower than this, 0.00 is automatically set.

- Run frequency limit based on frequency High/Low limit

Group	LED Display	Parameter Name	Set Value	Min/Max Range	Factory Defaults	Unit
Function group 1	F24	[Frequency High/Low limit select]	1	0/1	0	
	F25	[Frequency high limit]	-	0/400	60.0	Hz
	F26	[Frequency low limit]	-	0/400	0.5	Hz

- Set F24 to 1.
- Active run frequency can be set within the range set in F25 and F26.

▸ When frequency setting is done via Analog input (voltage or current input), the inverter operates within the range of high and low limit frequency as shown below.

▸ This setting is also valid when frequency setting is done via keypad.

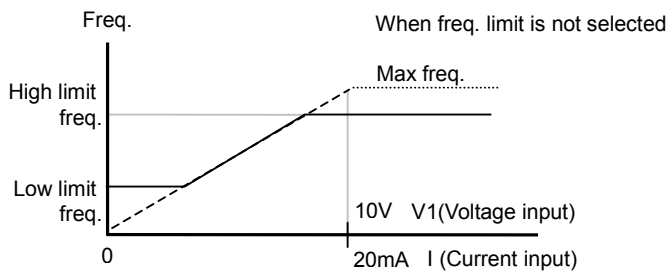

WALTHER FLENDER®
ANTRIEBSTECHNIK

- Skip frequency

Group	LED display	Parameter name	Set value	Min/Max range	Factory defaults	Unit
Function group 2	H10	[Skip frequency select]	1	0/1	0	
	H11	[Skip frequency low limit 1]	-	0/400	10.0	Hz
	~	~				
	H16	[Skip frequency high limit 3]	-	0/400	35.0	Hz

- Set H10 to 1.
- Run frequency setting is not available within the skip frequency range of H11-H16.
- Skip frequency is settable within the range of F21 – [Max frequency] and F23 – [Start frequency].

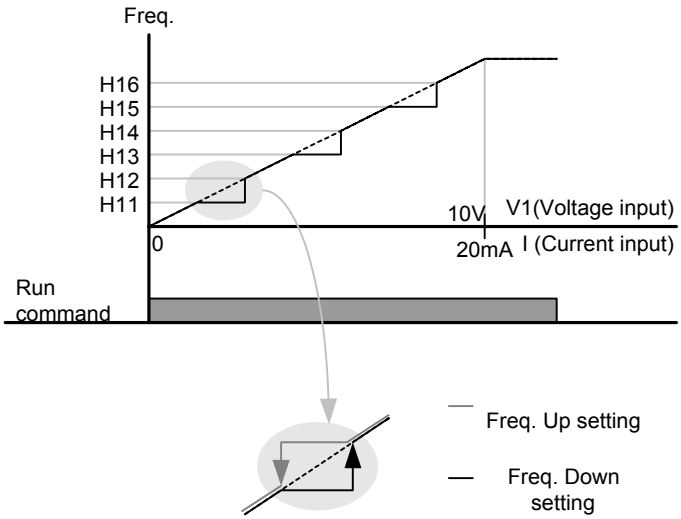

- When it is desired to avoid resonance attributable to the natural frequency of a mechanical system, these parameters allow resonant frequencies to be skipped. Three different areas of [Skip frequency High/Low limit] can be set with the skip frequencies set to either the top or bottom point of each area. However, during acceleration or deceleration, the run frequency within the set area is valid.
- In the case of increasing frequency setting as shown above, if frequency set value (Analog setting via voltage, current or digital setting via keypad) is within the range of Skip frequency, it maintains Skip frequency low limit value. If the set value is outside the range, it increases the frequency.
- In the case of decreasing frequency setting, if frequency set value (Analog setting via voltage, current or Digital setting via keypad) is within the range of Skip frequency, it maintains Skip frequency high limit value. If the set value is outside the range, it decreases the frequency.

WALTHER FLENDER®
ANTRIEBSTECHNIK

10 Advanced functions

10.1 DC brake

- Stop mode via DC brake

Group	LED Display	Parameter Name	Set value	Min/Max Range	Factory Defaults	Unit
Function group 1	F 4	[Stop mode select]	1	0/2	0	
	F 8	[DC Brake start frequency]	-	0/60	5.0	Hz
	F 9	[DC Brake wait time]	-	0/60	1.0	sec
	F10	[DC Brake voltage]	-	0/200	50	%
	F11	[DC Brake time]	-	0/60	1.0	sec

- Set F4 - [Stop mode select] to 1.
- F 8 : The frequency at which the DC brake will become active.
- F 9 : Inverter will wait for this time after F8 - [DC Brake start frequency] before applying F10 - [DC Brake voltage].
- F10 : It sets the level as a percent of H33 – [Motor rated current].
- F11 : It sets the time that F10 - [DC Brake voltage] is applied to the motor after F 9 - [DC Brake wait time].

☞ **Caution:**
If excessive DC Brake voltage is set or DC Brake time is set too long, it may cause motor overheating and damage to the motor.

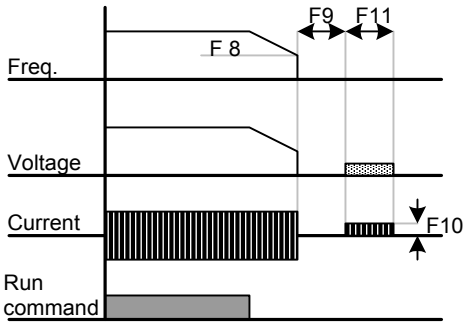

- Setting F10 or F11 to 0 will disable DC brake.
- F 9 – [DC Brake Wait time] : When load inertia is great or F 8 – [DC Brake Start Frequency] is high, Over current trip may occur. It can be prevented via F9.

WALTHER FLENDER®
ANTRIEBSTECHNIK

- Starting DC brake

Group	LED Display	Parameter Name	Set value	Min/Max Range	Factory Defaults	Unit
Function group 1	F12	[DC Brake start voltage]	-	0/200	50	%
	F13	[DC Brake start time]	-	0/60	0	sec

- F12 : It sets the level as a percent of H33 – [Motor rated current].
- F13 : Motor accelerates after DC voltage is applied for the set time.

☞ **Caution :**
If excessive DC Brake voltage is set or DC Brake time is set too long, it may cause motor overheating and damage to the motor.

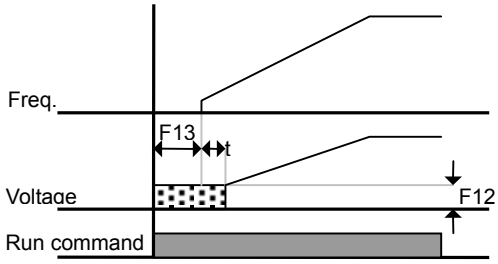

- Setting F12 or F13 to 0 will disable Starting DC brake.
- t : After F13 - **[DC Brake start time]**, the frequency is increasing after DC voltage is applied until the time t. In this case, DC Brake start time may be longer than the set value.

- DC brake at a stop

Group	LED Display	Parameter Name	Set value	Min/Max Range	Factory Defaults	Unit
Function group 1	F12	[DC Brake start voltage]	-	0/200	50	%
I/O group	I22	[Multi-function input terminal P3 define]	11	0/24	2	

- F12 : Set as a percent of H33 – [Motor rated current].
- Select a terminal to issue a command of DC brake during stop among P1 through P5.
- If P3 terminal is set for this function, set 22 to 11 {DC brake during stop}.

☞ **Caution :**
If excessive DC Brake voltage is set or DC Brake time is set too long, it may cause motor overheating and damage to the motor.

WALTHER FLENDER®
ANTRIEBSTECHNIK

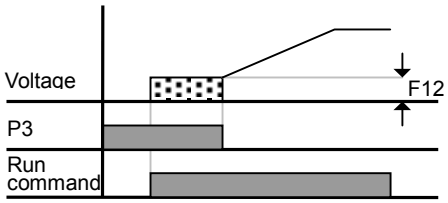

10.2 Jog operation

Group	LED display	Parameter name	Set value	Min/Max range	Factory defaults	Unit
Function group 1	F20	Jog frequency	-	0/400	10.0	Hz
I/O group	I22	[Multi-function input terminal P3 define]	4	0/24	2	

- Set the desired jog frequency in F20.
- **Select the terminal among the Multi-function input terminal P1 through P5 to use for this setting.**
- If P3 is set for Jog operation, set I22 to 4 {Jog}.
- Jog frequency can be set within the range of F21 - [Max frequency] and F22 – [Start frequency].

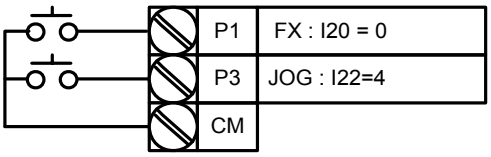

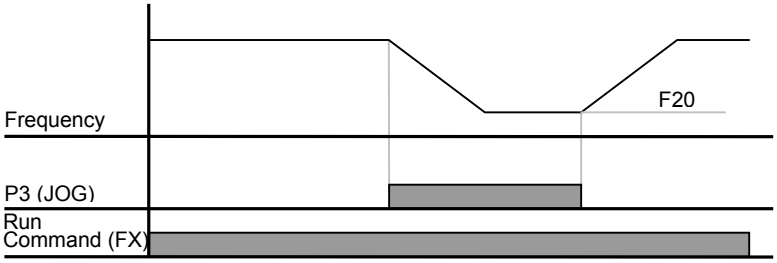

▸ Jog operation overrides all other operations except Dwell operation. Therefore, if Jog frequency command is entered in the middle of Multi-Step, Up-Down or 3-wire operation, operation is executed at Jog frequency.

WALTHER FLENDER®
ANTRIEBSTECHNIK

10.3 Up-Down operation

Group	LED display	Parameter name	Set value	Min/Max range	Factory defaults	Unit
I/O group	I20	[Multi-function input terminal P1 define]	0	0/24	2	
	~	~				
	I23	[Multi-function input terminal P4 define]	15		3	
	I24	[Multi-function input terminal P5 define]	16		4	

- **Select terminals for Up-Down operation among P1 through P5.**
- If P4 and P5 are selected, set I23 and I24 to 15 {Frequency Up command} and 16 {Frequency Down command}, respectively.

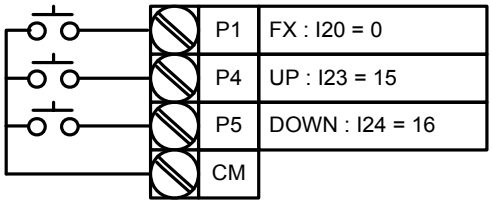

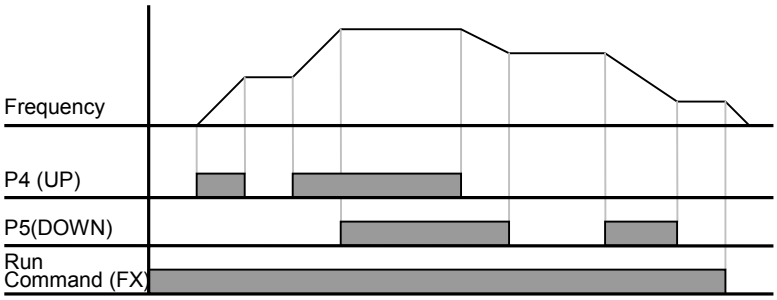

10.4 3-Wire Operation

Group	LED display	Parameter name	Set value	Min/Max range	Factory defaults	Unit
I/O group	I20	[Multi-function input terminal P1 define]	0	0/24	2	
	~	~				
	I24	[Multi-function input terminal P5 define]	17		4	

- **Select the terminal among P1 through P5 for use as 3-Wire operation.**
- If P5 is selected, set I24 to 17 {3-Wire operation}.

WALTHER FLENDER®
ANTRIEBSTECHNIK

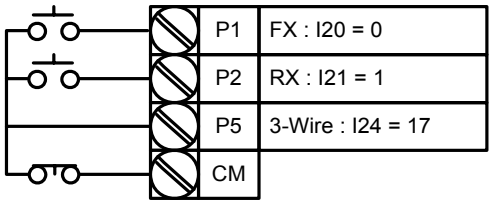

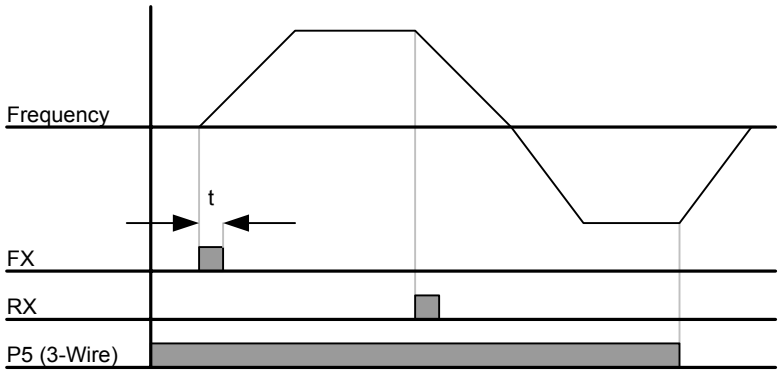

- If both 3-Wire and Up-Down operation are selected, the former will be ignored.
- The bandwidth of pulse (t) should be above 50msec.
- Speed search operation is valid even in the case of LVT (low voltage trip) following instant power failure.

10.5 Dwell operation

Group	LED Display	Parameter Name	Set value	Min/Max Range	Factory Defaults	Unit
Function group 2	H 7	[Dwell frequency]	-	0/400	5.0	Hz
	H 8	[Dwell time]	-	0/10	0.0	sec

- In this setting, motor begins to accelerate after dwell operation is executed for dwell time at the dwell frequency.
- It is mainly used to release mechanical brake in elevators after operating at dwell frequency.

- Dwell frequency : This function is used to output torque in an intended direction. It is useful in hoisting applications to get enough torque before releasing a mechanical brake. Rated Slip frequency is calculated by the formula shown below.

$$f_s = f_r - \left(\frac{rpm \times P}{120} \right)$$

Where, f_s = Rated slip frequency

f_r = Rated frequency

rpm = Motor nameplate RPM

P = Number of Motor poles

Example

Rated frequency = 60Hz

Rated RPM = 1740rpm

Number of motor poles= 4

$$f_s = 60 - \left(\frac{1740 \times 4}{120}\right) = 2Hz$$

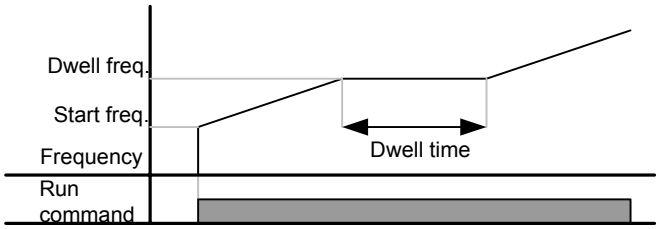

10.6 Slip compensation

Group	LED Display	Parameter Name	Set value	Min/Max Range	Factory Defaults	Unit
Function group 2	H30	[Motor type select]	-	0.2/2.2	-	
	H31	[Number of motor poles]	-	2/12	4	
	H32	[Rated slip frequency]	-	0/10	-	Hz
	H33	[Motor rated current]	-	1.0/12	-	A
	H34	[Motor No Load Current]	-	0.1/12	-	A
	H36	[Motor efficiency]	-	50/100	-	%
	H37	[Load inertia rate]	-	0/2	0	
	H40	[Control mode select]	1	0/3	0	

- Set H40 – [Control mode select] to 1 {Slip compensation}.
- This function enables the motor to run in constant speed by compensating inherent slip in an induction motor. If motor shaft speed decreases significantly under heavy loads then this value should be increased.

▶ H30 : Set the motor type connected to the inverter.

H30	[Motor type select]	0.2	0.2kW
		0.4	0.4kW
		0.75	0.75kW
		1.5	1.5kW
		2.2	2.2kW

▶ H31 : Enter the pole number on the Motor nameplate.

- H32 : Enter the slip frequency based on the following formula and motor nameplate.

$$f_s = f_r - \left(\frac{rpm \times P}{120}\right)$$

Where, f_s = Rated slip frequency

f_r = Rated frequency

rpm = Motor nameplate RPM

P = Number of Motor poles

Example

Rated frequency= 60Hz

Rated motor RPM= 1740rpm

Motor pole number= 4

$$f_s = 60 - \left(\frac{1740 \times 4}{120}\right) = 2Hz$$

H32- [Rated slip frequency] is 2Hz. Set H32- [Rated slip frequency] to 2.

- H33 : Enter the motor nameplate rated current
- H34 : Enter the measured current when the motor is running at rated frequency after the load is removed. Enter 50% of the rated motor current when it is difficult to measure the motor no load current.
- H36 : Enter motor efficiency on the nameplate.
- H37 : Select load inertia based on motor inertia as shown below.

H37	[Load inertia rate]	0	Less than 10 times motor inertia
		1	About 10 times motor inertia
		2	Greater than 10 times motor inertia

- As the loads are heavier, the speed gap between rated RPM and synchronous speed is widening (see the figure below). This function compensates for this inherent slip. Set the Torque boost value within 2%. Setting it too high may cause motor over-energizing and lead to error in calculating slip speed.

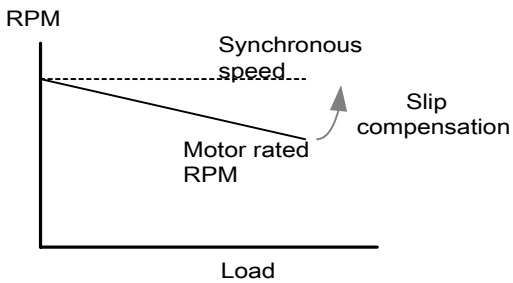

10.7 PID Control

Group	LED Display	Parameter Name	Set value	Min/Max Range	Factory Defaults	Unit
Function group 2	H40	[Control mode select]	2	0/3	0	-
	H50	[PID Feedback select]	-	0/1	0	-
	H51	[P gain for PID controller]	-	0/999.9	300.0	%
	H52	[Integral time for PID controller (I gain)]	-	0.1/32.0	300	Sec
	H53	[Differential time for PID controller (D gain)]	-	0.0/30.0	0	Sec
	H54	[F gain for PID controller]		0/999.9	0	%
	H55	[PID output frequency limit]	-	0/400	60.0	Hz
	I20~24	Multi-function input terminal P1-P5 define	21	0/24	-	-

- Set H40 to 2 {PID Feedback control}.
- Output frequency of the inverter is controlled by PID control for use as constant control of flow, pressure or temperature.

▶ H50 : Select the feedback type of PID controller .

H50	[PID feedback select]	0	{Terminal I input (0 ~ 20 mA)}
		1	{Terminal V1 input (0 ~ 10 V)}

▶ H51 : Set the percentage of output to error. If P Gain is set to 50%, 50% of the error value will be output.

▶ H52 : Set the time needed to output the accumulated error value. Set the time required to output 100% when the error value is 100%. If H52 - [Integral time for PID controller (I gain)] is set to 1 sec, 100% is output in 1 sec.

▶ H53 : Set the output value corresponding to the variation of the error. The error is detected by 0.01 sec in SERIES N. If differential time is set to 0.01 sec and the percentage variation of error is 100 per 1 sec, 1% in 100% is output per 10msec.

▶ H54 : PID Feed Forward Gain. Set the gain to add the target value to the PID controller output.

▶ H55 : It limits the output of the PID controller.

▶ I20~I24: To exchange PID, set one of P1-P5 terminal to 21 and turn ON.

PID control block diagram

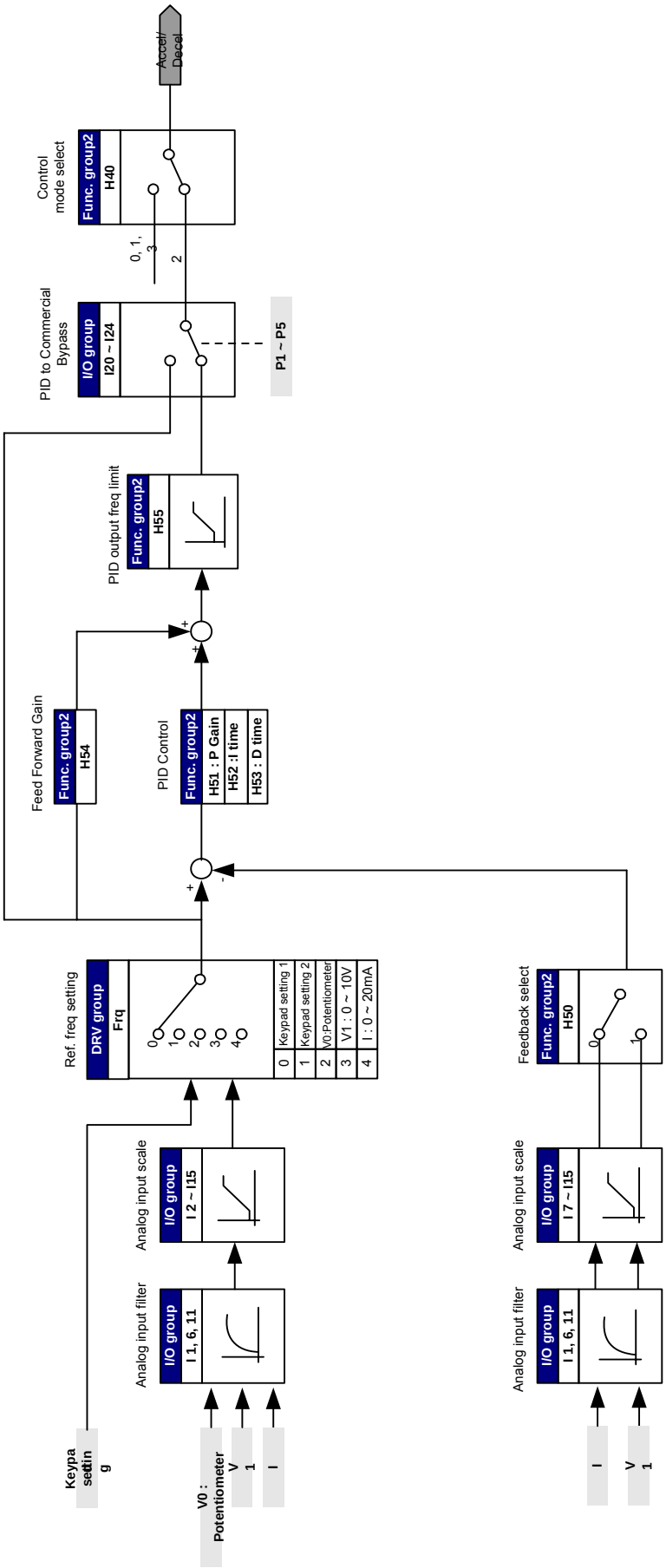

10.8 Auto tuning

Group	LED Display	Parameter Name	Set value	Min/Max Range	Factory Defaults	Unit
Function group 2	H41	[Auto tuning]	1	0/1	0	-
	H42	[Stator resistance (Rs)]	-	0/14.0	-	Ω
	H44	[Leakage inductance (Lσ)]	-	0/300.00	-	mH

- Automatic measuring of the motor parameters is provided.
- The measured motor parameters in H41 can be used in Auto Torque Boost and Sensorless Vector Control.

☞ **Caution :**
Auto tuning should be executed after stopping the motor. Motor shaft must not run by the load during H41 – [Auto tuning].

- H41 : When H41 is set to 1 and press the Prog/Ent (•) key, Auto tuning is activated and "TUn" will appear on the LED keypad. When finished, "H41" will be displayed.
- H42, H44 : The values of motor stator resistance and leakage inductance detected in H41 are displayed, respectively. When H93 – [Parameter initialize] is done, the preset value corresponding to motor type (H30) will be displayed.
- Press the STOP/RST key on the keypad or turn on the BX terminal to stop the Auto Tuning.
- If Auto tuning of H42 and H44 is interrupted, the preset value will be used.
- See page 10-12 for motor preset parameter values.

☞ **Caution :**
Do not enter any incorrect value as stator resistance and leakage inductance. Otherwise, the function of Sensorless vector control and Auto torque boost could be deteriorated.

10.9 Sensorless vector control

Group	LED Display	Parameter Name	Set value	Min/Max Range	Factory Defaults	Unit
Function group 2	H40	[Control mode select]	3	0/3	0	-
	H30	[Motor type select]	-	0.2/2.2	-	kW
	H32	[Rated slip frequency]	-	0/10	-	Hz
	H33	[Motor rated current]	-	1.0/12	-	A
	H34	[Motor No Load Current]	-	0.1/12	-	A
	H42	[Stator resistance (Rs)]	-	0/14.0	-	Ω
	H44	[Leakage inductance (Lσ)]	-	0/300.00	-	mH
	F14	[Time for energizing a motor]	-	0.0/60.0	1.0	Sec

- If H40 – [Control mode select] is set to 3, Sensorless vector control will become active.

☞ **Caution :**
Motor parameters should be measured for high performance. It is highly recommended H41 – [Auto tuning] be done prior to proceeding operation via Sensorless vector control.

- **Ensure that the following parameters are entered correctly for high perfomance in Sonsorless vector control.**
- H30 : Select motor type connected to inverter output terminal.
- H32 : Enter rated slip frequency based on motor nameplate RPM and rated frequency.
- H33 : Enter motor nameplate rated current.
- H34 : After removing the motor load, select H40 – [Control mode select] to 0 {V/F control} and run the motor at 60Hz. Enter the current displayed in Cur-[Output current] as motor no load current. If it is difficult to remove the load from the motor shaft, enter the value either 40 to 50% of the H33 – [Motor rated current] or the factory default.
- H42, H44 : Enter the value of the parameter measured during H41 – [Auto tuning] or the factory default.
- F14 : This parameter accelerates the motor after magnetizing the motor for the set time. The amount of the magnetizing current is set in H34- [Motor no load current].

■ Factory default of motor related parameters (Function group 2)

H30-Motor rating [kW]	H32-Rated slip freq [Hz]	H33-Current rating [A]	H34-No-load current [A]	H42-Stator resistance [Ω]	H44-Leakage inductance [mH]
0.2	0.9	0.5	3.0	14.0	122.0
0.4	1.8	1.1	3.0	6.7	61.58.893
0.75	3.5	2.1	2.33	2.46	28.14
1.5	6.5	3.5	2.33	1.13	14.75
2.2	8.8	4.4	2.0	0.869	11.31

10.10 Energy-saving operation

Group	LED Display	Parameter Name	Set value	Min/Max Range	Factory Defaults	Unit
Function group 1	F40	[Energy-saving level]	-	0/30	0	%

- Set the amount of output voltage to be reduced in F40.
- Set as the percent of Max output voltage.
- For fan or pump applications, energy consumption can be dramatically reduced by decreasing the output voltage when light or no load is connected.

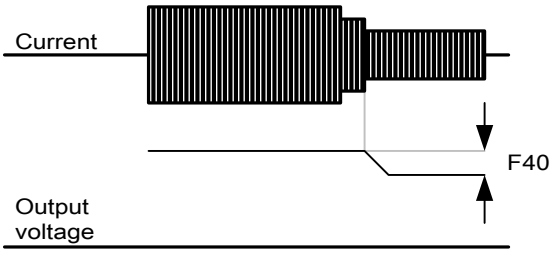

10.11 Speed Search

Group	LED Display	Parameter Name	Set value	Min/Max Range	Factory Defaults	Unit
Function group 2	H22	[Speed Search Select]	-	0/15	0	
	H23	[Current level during Speed search]	-	80/200	100	%
	H24	[P gain during Speed search]	-	0/9999	100	
	H25	[I gain during speed search]	-		1000	
I/O group	I54	[Multi-function output terminal select]	15	0/20	12	
	I55	[Multi-function relay select]	15		17	

- This is used to prevent possible fault from occurring if the inverter outputs the output voltage during operation after the load is removed.
- The inverter estimates the motor rpm based on output current, so detecting exact speed is difficult.

WALTHER FLENDER®
ANTRIEBSTECHNIK

- The following table shows 4 types of Speed search selection.

H22	[Speed search select]		Speed search during H20 – [Power ON start]	Speed search during Instant Power Failure restart	Speed search during H21- [Restart after fault reset]	Speed search during Acceleration
			Bit 3	Bit 2	Bit 1	Bit 0
		0	-	-	-	-
		1	-	-	-	✓
		2	-	-	✓	-
		3	-	-	✓	✓
		4	-	✓	-	-
		5	-	✓	-	✓
		6	-	✓	✓	-
		7	-	✓	✓	✓
		8	✓	-	-	-
		9	✓	-	-	✓
		10	✓	-	✓	-
		11	✓	-	✓	✓
		12	✓	✓	-	-
		13	✓	✓	-	✓
		14	✓	✓	✓	-
		15	✓	✓	✓	✓

- H23 : It limits the current during Speed search. Set as the percent of H33 – [Motor rated current].
- H24, H25 : Speed search is activated via PI control. Adjust P gain and I gain corresponding to the load characteristics.
- I54, I55 : Signal of active Speed search is given to external sequence via Multi-function output terminal(MO) and Multi-function relay output (30AC).

- EX) Speed search during Instant Power Failure restart

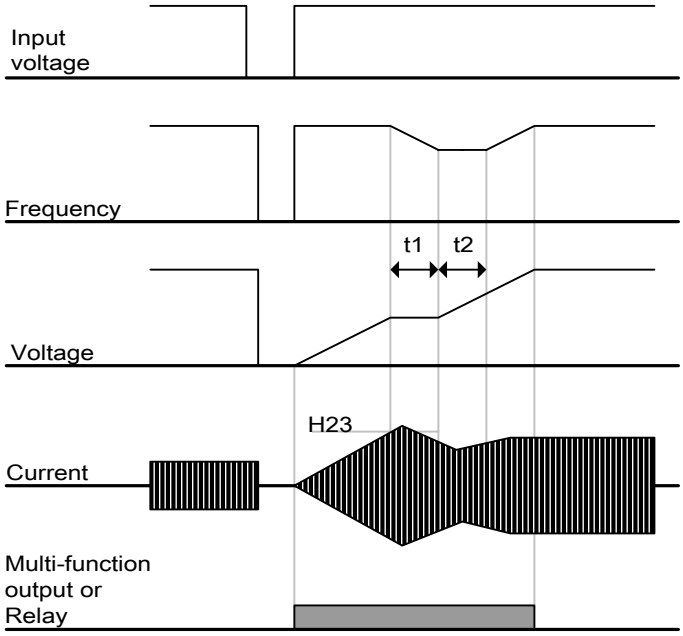

- When the input power is cut off due to instant power failure, the inverter outputs Low voltage trip (LV) to hold the output.
- When the power is restored, the inverter outputs the frequency before the low voltage trip and the voltage is increased due to PI control.
- t1 : If the rise in current is greater than the preset level in H23, the rise in voltage will stop and the frequency is decreased.
- t2 : If the opposite of t1 occurs, the increase in voltage starts again and the decrease in frequency stops.
- When the frequency and voltage are restored back to the nominal level, acceleration will continue at the frequency before trip.

- Speed search is suitable operation when load inertia is great. It is highly recommended to restart after stopping the motor when the load inertia is great.

10.12 Auto restart try

Group	LED Display	Parameter Name	Set value	Min/Max Range	Factory Defaults	Unit
Function group 2	H26	[Number of Auto Restart try]	-	0/10	0	
	H27	[Auto Restart time]	-	0/60	1.0	Sec

- This parameter sets the number of times auto restart is activated in H26.
- It is used to prevent the system down caused by internal protection function activated by the causes such as noise.

- H26 : Auto restart will become active after the H27. The H26 – [Number of Auto restart try] is reduced by 1 when it is active. If the trip outnumbers the preset restart try, auto restart function is deactivated. If the setting is reset via the control terminal or the STOP/RST key on the keypad, the number of auto restart try set by user is automatically entered.
- If there is no more trip occurring for 30 sec after Auto restart operation, the H26 is restored to the preset value.
- When operation is stopped due to Low voltage {Lvt} or Emergency stop {EST}, Auto restart will be deactivated.
- After the H27- [Auto Restart time], the motor starts acceleration automatically via speed search (H22-25).

- The following pattern is shown when the H26 – [Number of auto restart try] is set to 3.

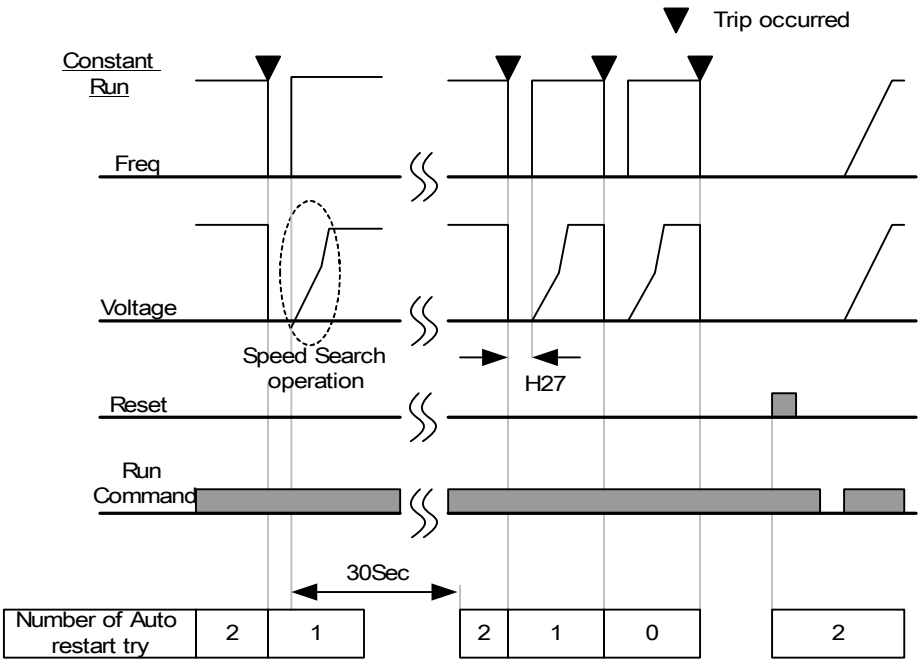

WALTHER FLENDER®
ANTRIEBSTECHNIK

10.13 Carrier frequency select

Group	LED Display	Parameter Name	Set value	Min/Max Range	Factory Defaults	Unit
Function group 2	H39	[Carrier frequency select]	-	0/15	10	

- This parameter affects the sound of the inverter during operation.

H39	If carrier frequency set higher	Motor noise	↓
		Heat loss of the inverter	↑
		Inverter noise	↑
		Leakage current	↑

10.14 Second motor operation

Group	LED Display	Parameter Name	Set value	Min/Max Range	Factory Defaults	Unit
Function group 2	H81	[2nd motor Accel time]	-	0/6000	5.0	Sec
	H82	[2nd motor Decel time]	-		10.0	Sec
	H83	[2nd motor base frequency]	-	30/400	60.0	Hz
	H84	[2nd motor V/F pattern]	-	0/2	0	
	H85	[2nd motor forward torque boost]	-	0/15	5	%
	H86	[2nd motor reverse torque boost]	-		5	%
	H87	[2nd motor stall prevention level]	-	30/200	150	%
	H88	[2nd motor Electronic thermal level for 1 min]	-	50/200	150	%
	H89	[2nd motor Electronic thermal level for continuous]	-		100	%
	H90	[2nd motor rated current]	-	0.1/20	1.8	A
I/O group	I20	[Multi-function input terminal P1 define]	-	0/24	0	
	~	~				
	I24	[Multi-function input terminal P5 define]	12		4	

- **<u>Select the terminal among Multi-function input P1 through P5 for second motor operation.</u>**
- If using the terminal P5 for second motor operation, set I24 to 12.

- Used when an inverter operates 2 motors connected to two different types of the loads.
- **2nd motor operation does not run 2 motors at the same time.** As the figure below, when using two motors with an inverter by exchanging them, different values can be set for the 2nd motor via the Multi-function input terminal and parameters set in H81-H90.
- **Turn the I24(setting: 12) On after motor is stopped.**
- Parameters from H81 to H90 are applied to the 1st motor as well as the 2nd motor.

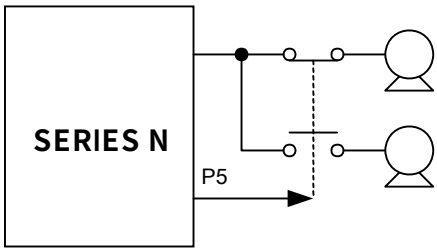

10.15 Parameter initialize & Lock

- Parameter initialize

Group	LED Display	Parameter Name	Min/Max Range		Factory Default
Function group 2	H93	[Parameter initialize]	0	-	0
			1	Initialize all 4 parameter groups	
			2	Initialize Drive group Only	
			3	Initialize Function group 1 Only	
			4	Initialize Function group 2 Only	
			5	Initialize I/O group Only	

- Select the group to be initialized and initialize the parameters in H93.

- Press the Prog/Ent (●) key after selecting the desired number in H93. H93 will reappear after the setting.

WALTHER FLENDER®
ANTRIEBSTECHNIK

- Password Register

Group	LED Display	Parameter Name	Set value	Min/Max Range	Factory Defaults	Unit
Function group 2	H94	[Password Register]	-	0/FFF	0	
	H95	[Parameter lock]	-	0/FFF	0	

- This parameter creates password for H95 – [Parameter lock].
- Valid password is Hexa decimal value (0-9, A, B, C, D, E, F).

☞ **Caution:**

Do not forget the registered password. It is also used when unlocking the parameters.

- Factory default password is 0. Enter the new password except 0.
- Follow the table below to register password for Parameter lock.

Step	Description	LED Display
1	Jump to H94 – [Password Register].	H94
2	Press the Prog/Ent (●) key twice.	0
3	Enter the password you wish (e.g.: 123).	123
4	“123” is blinking by pressing the Prog/Ent (●) key.	123
4	Press the Prog/Ent (●) key once to enter the value into memory.	H94

- Follow the table below to change the password. (Current PW: 123 -> New PW: 456)

Step	Description	LED Display
1	Jump to H94 – [Password Register].	H94
2	Press the Prog/Ent (●) key once.	0
3	Enter any number (e.g.: 122)	122
4	Press the Prog/Ent (●) key. 0 is displayed because wrong value was entered. Password cannot be changed in this status.	0
5	Enter the right password.	123
6	Press the Prog/Ent (●) key once.	123
7	Enter a new password.	456
8	Press the Prog/Ent (●) key. Then “456” will blink.	456
9	Enter the Prog/Ent (●) key to finish.	H94

- Parameter Lock

Group	LED Display	Parameter Name	Set value	Min/Max Range	Factory Defaults	Unit
Function group 2	H95	[Parameter lock]	-	0/FFF	0	
	H94	[Password Register]	-	0/FFF	0	

- This parameter is used to lock the user-set parameters using the password.

▶ See the table below to lock the user-set parameter via the H94 – [Password Register].

Step	Description	LED Display
1	Go to H95 – [Parameter lock]	H95
2	Enter the Prog/Ent (●) key	UL
3	Parameter value can be changed in UL (Unlock) status. While seeing this message…	UL
4	Enter the Prog/Ent (●) key.	0
5	Enter the password created in H94 (e.g.: 123).	123
6	Enter the Prog/Ent (●) key	L
7	Parameter value cannot be changed in L (Lock) status.	L
8	Press either the left (◀) or right (▶) key.	H95

▶ See the table below to unlock the user-set parameter via password.

Step	Description	LED Display
1	Go to H94 – [Password register]	H94
2	Press the Prog/Ent (●) key	L
3	Parameter value cannot be changed in L(Lock) status.	L
4	Press the Prog/Ent (●) key	0
5	Enter the password created in H94 (e.g.: 123).	123
6	Press the Prog/Ent (●) key	UL
7	Parameter value can be changed in UL (Unlock) status. While seeing this message…	UL
8	Press the Prog/Ent (●) key	H95

Notes:

11 Monitoring

11.1 Operating status monitoring

- Output current

Group	LED Display	Description	Set value	Min/Max range	Factory default	Unit
Drive group	CUr	Output current	-			

▪ Inverter output current can be monitored in Cur.

- Motor RPM

Group	LED Display	Description	Set value	Min/Max range	Factory default	Unit
Drive group	rPM	[Motor RPM]	-			
Function group 2	H31	[Number of motor poles]	-	2/12	4	
	H40	[Control mode select]	-	0/2	0	
	H74	[Gain for Motor rpm display]	-	1/1000	100	%

▪ Motor rpm can be monitored in rPM.

▸ When H40 is set to 0 {V/F control} or 1 {PID control}, the Inverter output frequency (f) is displayed in RPM using the formula below. Motor slip is not considered.

$$RPM = \left(\frac{120 \times f}{H31}\right) \times \frac{H74}{100}$$

▸ H31 : Enter the number of rated motor poles on the nameplate.

▸ H74 : This parameter is used to change the motor speed display to rotating speed (r/min) or mechanical speed (m/mi).

- Inverter DC Link Voltage

Group	LED Display	Parameter Name	Set value	Min/Max range	Factory default	Unit
Drive group	dCL	[Inverter DC Link Voltage]	-			

▪ Inverter DC link voltage can be monitored in dCL.

WALTHER FLENDER®
ANTRIEBSTECHNIK

- $\sqrt{2}$ times the value of input voltage is displayed while motor is at a stop.
- It is the voltage detected between P1 and N terminal of power terminal.

● User display select

Group	LED Display	Parameter Name	Set value	Min/Max range	Factory default	Unit
Drive group	vOL	[User display select]	-			
Function group 2	H73	[Monitoring item select]	-	0/2	0	

▪ The selected item in H73- [Monitoring item select] can be monitored in vOL- [User display select].

- H73 : Select one of the desired item numbers.

H73	[Monitoring item select]	0	Output voltage [V]	vOL
		1	Output power [kW]	POr
		2	Torque	tOr

Enter motor efficiency indicated on motor nameplate to H36 to display correct torque

● Power on display

Group	LED display	Parameter Name	Setting		Factory default
Function group 2	H72	[Power on display]	0	Frequency command (0.0)	0
			1	Accel time (ACC)	
			2	Decel time (DEC)	
			3	Drive mode (drv)	
			4	Frequency mode (Frq)	
			5	Multi-step frequency 1	
			6	Multi-step frequency 2	
		`	7	Multi-step frequency 3	
			8	Output current (CUr)	
			9	Motor rpm (rPM)	
			10	Inverter DC link voltage (dCL)	
			11	User display select (vOL)	
			12	Fault display 1	
			13	Fault display 2	

▪ Select the parameter to be displayed on the keypad when the input power is first applied.

WALTHER FLENDER®
ANTRIEBSTECHNIK

11.2 Monitoring the I/O terminal

- Input terminal status monitoring

Group	LED Display	Parameter Name	Set value	Min/Max range	Factory default	Unit
I/O group	I25	[Input terminal status display]	-			

- Active input terminal status (ON/OFF) can be monitored in I25.

  ▸ The following is displayed when P1, P3, P4 are ON and P2, P5 are OFF.

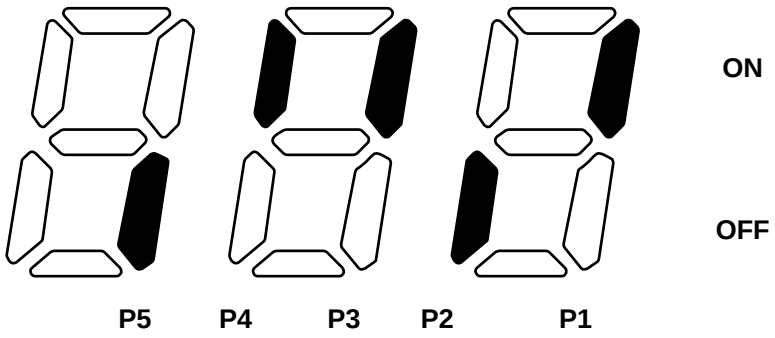

- Output terminal status monitoring

Group	LED Display	Parameter Name	Set value	Min/Max range	Factory default	Unit
I/O group	I26	[Output terminal status display]	-			

- Current status (ON/OFF) of the Multi-function output terminal (MO) and Multi-function relay can be monitored in I26.

  ▸ The following is displayed when Multi-function output terminal (MO) is ON and Multi-function relay (30AC) is OFF.

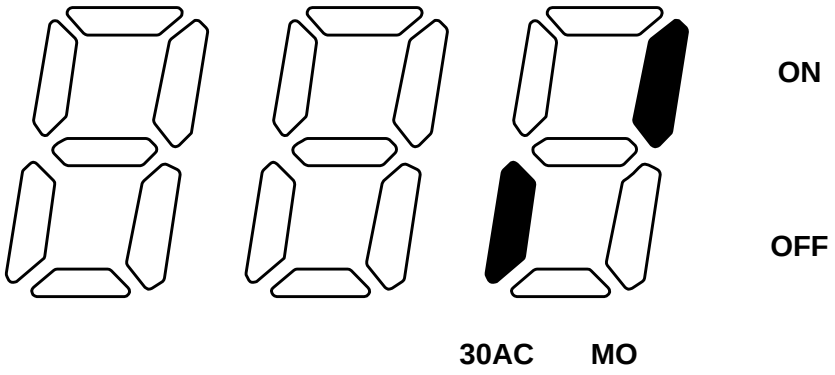

WALTHER FLENDER®
ANTRIEBSTECHNIK

11.3 Monitoring fault condition

- Monitoring fault display

Group	LED Display	Parameter Name	Set value	Min/Max range	Factory default	Unit
Drive group	nOn	[Fault Display]	-			

- The kind of fault occurred during operation is displayed in nOn.
- Up to 3 kinds of faults can be monitored.

▶ This parameter gives information on fault types and the operating status at the time of the fault. Refer to 1.6 How to monitor operation.

▶ Refer to Page 13-1 for various fault types.

Fault types	Frequency	30.0	
	Current	5.0	
	Accel/Decel Information	ACC	Fault during Accel
		dEC	Fault during Decel
		Std	Fault during constant run

- Fault History Monitoring

Group	LED Display	Parameter Name	Set value	Min/Max range	Factory default	Unit
I/O group	H 1	[Fault history 1]	-			
	~	~				
	H 5	[Fault history 5]				
	H 6	[Reset fault history]	-	0/1	0	

- H 1 ~ H 5 : Up to 5 fault information is stored.
- H 6 : Previous fault information stored in the code H1 through H5 is all cleared.

▶ . When a fault occurs during operation, it can be monitored in the **nOn**.

▶ When the fault condition is reset via the STOP/RST key on the keypad or multi-function terminal, information displayed in the **nOn** will be moved to the H1. In addition, the previous fault info stored in H1 will be automatically moved to H2. Therefore, the updated fault info will be stored in the H1.

▶ When more than 1 fault occurred at the same time, up to 3 types of faults will be stored in one code.

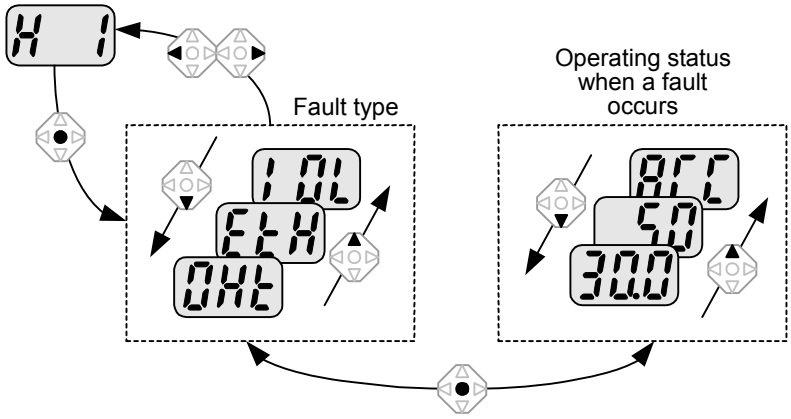

11.4 Analog Output

Group	LED Display	Parameter Name	Set value	Min/Max range	Factory default	Unit
I/O group	I50	[Analog output item select]	-	0/3	0	
	I51	[Analog output level adjustment]	-	10/200	100	%

- Output item and the level from the AM terminal are selectable and adjustable.

▶ I50 : The selected item will be output to Analog output terminal (AM).

I50	Analog output item select			10V
		0	Output frequency.	Max Frequency (F21)
		1	Output current	150% of Inverter rated current
		2	Output voltage	282 Vac
		3	Inverter DC link voltage	400 Vdc

▶ I51 : If you want to use Analog output value as a gauge input , the value can be adjustable corresponding to various gauge specifications.

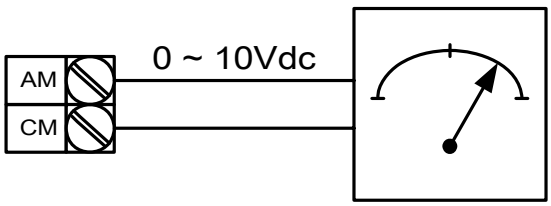

WALTHER FLENDER®
ANTRIEBSTECHNIK

11.5 Multi-function output terminal (MO) and Relay (30AC)

Group	LED display	Parameter Name	Setting				Factory default
I/O group	I54	[Multi-function output terminal select]	0	FDT-1			12
			1	FDT-2			
	I55	[Multi-function relay select]	2	FDT-3			
			3	FDT-4			
			4	FDT-5			
			5	Overload {OL}			
			6	Inverter Overload {IOL}			
			7	Motor stall {STALL}			
			8	Over voltage trip {OV}			
			9	Low voltage trip {LV}			
			10	Inverter cooling fan overheat {OH}			
			11	Command loss			
			12	During run			
			13	During stop			
			14	During constant run			
			15	During speed searching			
			16	Wait time for run signal input			
			17	Fault relay output			
	I56	[Fault relay output]		When setting the H26–[Number of auto restart tries]	When the trip other than low voltage trip occurs	When the low voltage trip occurs	
				Bit 2	Bit 1	Bit 0	
			0	-	-	-	2
			1	-	-	✓	
			2	-	✓	-	
			3	-	✓	✓	
			4	✓	-	-	
			5	✓	-	✓	
			6	✓	✓	-	
			7	✓	✓	✓	

- Select the desired item to be output via MO terminal and relay (30AC).

WALTHER FLENDER®
ANTRIEBSTECHNIK

- I56 : When 17 {Fault display} is selected in I54 and I55, Multi-function output terminal and relay will be activated with the value set in I56.

0 : FDT-1

- Check whether the output frequency of the inverter matches the user-setting frequency.
- Active condition: Absolute value (preset frequency - output frequency) <= Frequency Detection Bandwidth/2

Group	LED Display	Parameter Name	Set value	Min/Max range	Factory default	Unit
I/O group	I53	[Frequency Detection Bandwidth]	-	0/400	10.0	Hz

- Cannot be set above Max frequency (F21).

- When setting I53 to 10.0

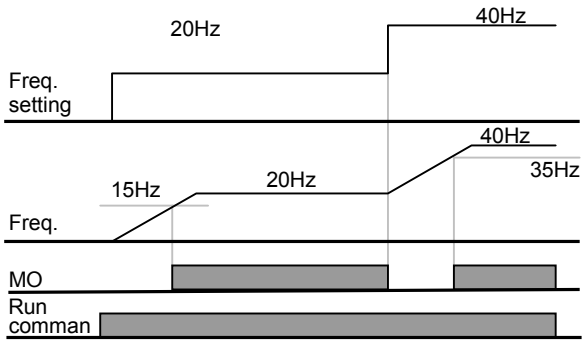

1 : FDT-2

- It activates when the preset frequency matches frequency detection level (I52) and FDT-1 condition is met.
- Active condition: (Preset frequency = FDT level) & FDT-1

Group	LED Display	Parameter Name	Set value	Min/Max range	Factory default	Unit
I/O group	I52	[Frequency Detection Level]	-	0/400	30.0	Hz
	I53	[Frequency detection bandwidth]	-		10.0	

- It cannot be set above F21- [Max frequency].

- When setting I52 and I53 to 30.0 Hz and 10.0 Hz, respectively

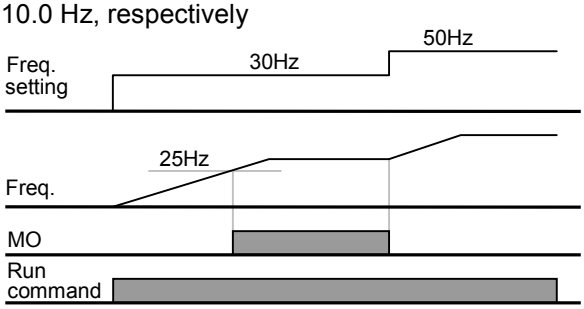

WALTHER FLENDER®
ANTRIEBSTECHNIK

2 : FDT-3

- It activates when run frequency meets the following condition.
- Active condition: Absolute value (FDT level - run frequency) <= FDT Bandwidth/2

Group	LED Display	Parameter Name	Set value	Min/Max range	Factory default	Unit
I/O group	I52	[Frequency Detection level]	-	0/400	30.0	Hz
	I53	[Frequency Detection Bandwidth]	-		10.0	

- It cannot be set above F21- [Max frequency].

- When setting I52 and I53 to 30.0Hz and 10.0 Hz, respectively

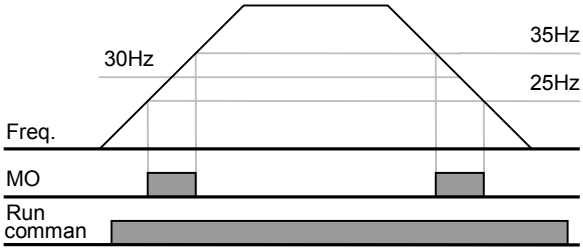

3 : FDT-4

- Become active when run frequency meets the following condition.
- Active condition

Accel time: Run Frequency >= FDT Level

Decel time: Run Frequency > (FDT Level – FDT Bandwidth/2)

Group	LED Display	Description	Set value	Min/Max range	Factory default	Unit
I/O group	I52	[Frequency Detection level]	-	0/400	30.0	Hz
	I53	[Frequency Detection Bandwidth]	-		10.0	

- Cannot be set above F21- [Max Frequency].

- When setting I52, I53 to 30.0 Hz and 10.0Hz, respectively.

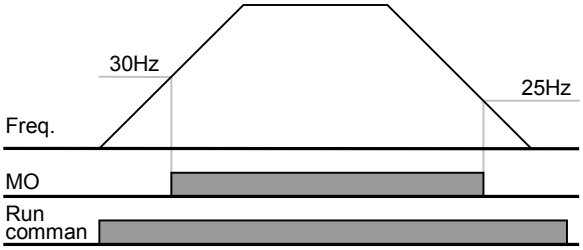

WALTHER FLENDER®
ANTRIEBSTECHNIK

4 : FDT-5

- Activates at B contact.
- Active condition

Accel time: Run Frequency >= FDT Level

Decel time: Run Frequency > (FDT Level – FDT Bandwidth/2)

Group	LED Display	Parameter Name	Set value	Min/Max range	Factory default	Unit
I/O group	I52	[Frequency Detection Level]	-	0/400	30.0	Hz
	I53	[Frequency Detection Bandwidth]	-		10.0	

- It cannot be set above F21- [Max Frequency].

- When setting I52, I53 to 30.0 Hz and 10.0Hz, respectively

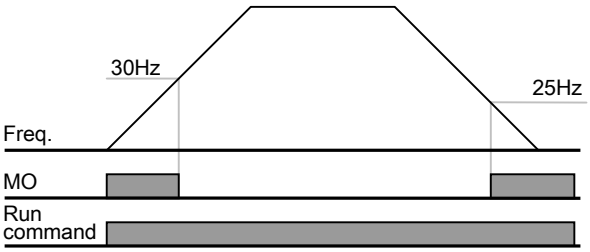

5 : Overload{OL}

- Refer to Page 12-2 Overload Warning and trip

6 : Inverter Overload{IOL}

- Refer to Page 12-6 Inverter Overload

7 : Motor Stall {STALL}

- Refer to Page 12-3 Stall prevention

8 : Over voltage Trip {Ovt}

- Become active when DC link voltage exceeded 400V and led to Over voltage trip.

9 : Low voltage Trip {Lvt}

- Become active when DC link voltage decreased to 200V and led to Low voltage trip.

10 : Inverter cooling fin overheating {OHt}

- Become active when overheated inverter cooling fan triggers protection function.

WALTHER FLENDER®
ANTRIEBSTECHNIK

11 : Command Loss

- Become active when frequency command is lost.

12 : During run

- Become active when run command is given and the inverter generates output voltage.

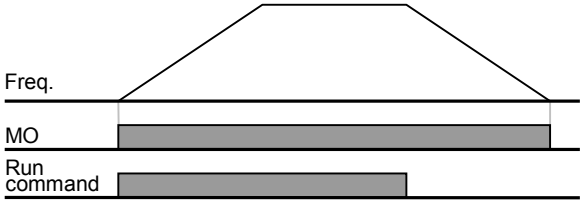

13 : During stop

- Activated during stop.

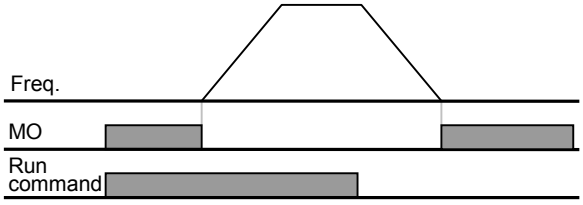

14 : During constant run

- Activated during nominal operation.

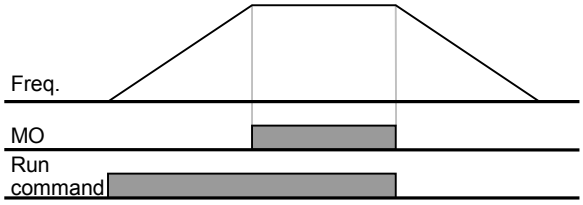

15 : During speed searching

- Refer to Page 10-12 Speed search operation.

16 : Wait time for run signal input

- This function becomes active during normal operation and that the inverter waits for active run command from external sequence.

17 : Fault relay output

- The parameter set in I56 is activated.
- For example, if setting I55, I56 to 17 and 2, respectively, Multi-function output relay will become active when trip other than “Low voltage trip” occurred.

12 Protective functions

12.1 Electronic Thermal

Group	LED display	Parameter Name	Set value	Min/Max setting	Factory default	Unit
Function group 1	F50	[Electronic thermal select]	1	0/1	0	
	F51	[Electronic thermal level for 1 minute]	-	50/150	150	%
	F52	[Electronic thermal level for continuous]	-		100	%
	F53	[Motor type]	-	0/1	0	

- Select F50 – [Electronic thermal select] to 1.
- It activates when the motor is overheated (time-inverse). If current greater than set in F51 flows, inverter output is turned off for the preset time in F51- [Electronic thermal level for 1 minute].

- F51 : Enter the value of max current that is capable of flowing to the motor continuously for one minute. It is set in percent of motor rated current. The value cannot be set lower than F52.
- F52 : Enter the amount of current for continuous operation. Normally motor rated current is used. It cannot be set greater than F51.
- F53 : For an inductance motor, cooling effects decrease when a motor is running at low speed. A special motor is a motor that uses a separately powered cooling fan maximize cooling effect even in low speed. Therefore, as the motor speed changes, the cooling do not change.

F53	[Motor type]	0	Standard motors having a cooling fan directly connected to the shaft
		1	Special motor that uses a separately powered cooling fan.

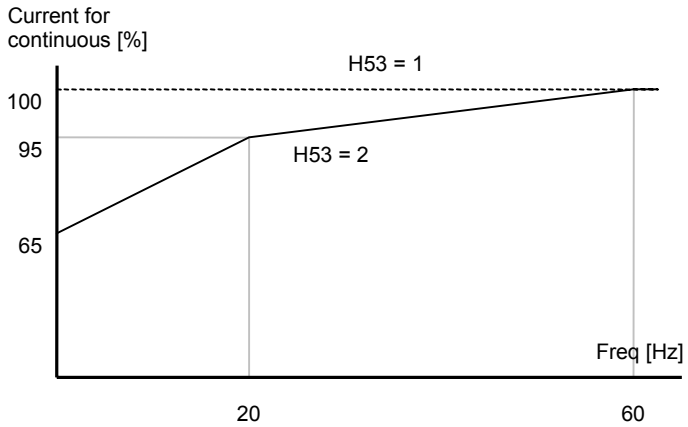

WALTHER FLENDER®
ANTRIEBSTECHNIK

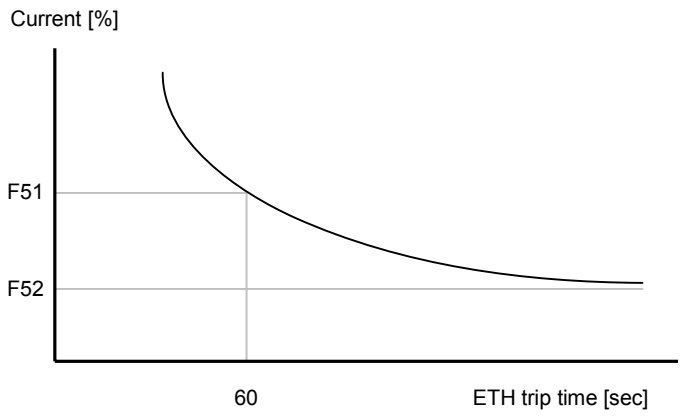

12.2 Overload Warning and trip

- Overload warning

Group	LED Display	Parameter Name	Set value	Min/Max setting	Factory default	Unit
Function group 1	F54	[Overload warning level]	-	30/150	150	%
	F55	[Overload warning time]	-	0/30	10	Sec
I/O group	I54	[Multi-function output terminal select]	5	0/17	12	
	I55	[Multi-function relay select]	5		17	

- Select one output terminal for this function between MO and 30AC.
- If selecting MO as output terminal, set I54 to 5 {Overload : OL}.

▸ F54 : Set the value as a percent of motor rated current.

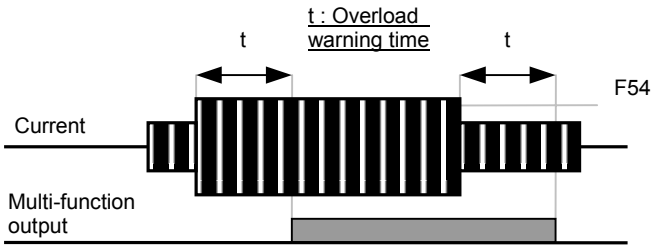

- Overload trip

Group	LED Display	Parameter Name	Set value	Min/Max setting	Factory default	Unit
Function group 1	F56	[Overload trip select]	1	0/1	0	
	F57	[Overload trip level]	-	30/200	180	%
	F58	[Overload trip time]	-	0/60	60	sec

- Set F56 to 1.
- Inverter output is turned off when motor is overloaded.
- Inverter output is turned off when excessive current flows to the motor for F58 – [Overload trip time].

12.3 Stall prevention

Group	LED Display	Parameter Name	Set value	Min/Max setting	Factory default	Unit
Function group 1	F59	[Stall prevention select]	-	0/7	3	
	F60	[Stall prevention level]	-	30/150	150	%
I/O group	I54	[Multi-function output terminal select]	7	0/17	12	
	I55	[Multi-function relay select]	7		17	

- During acceleration : Motor acceleration is stopped when current exceeding the value set in F60 flows.
- During constant run : Motor decelerates when current exceeding the value set in F60 flows.
- During deceleration : Motor deceleration is stopped when inverter DC link voltage rises above a certain voltage level.
- F60 : The value is set as the percent of motor rated current (H33).
- I54, I55: Inverter outputs signals through multi-function output terminal (MO) or relay output (30AC) when stall prevention function is activated. Stall prevention operation can be monitored by external sequence.

▶ F59 : Stall prevention can be set as the table below.

F59	[Stall prevention select]	Setting	During Deceleration	During constant speed	During Acceleration
			Bit 2	Bit 1	Bit 0
		0	-	-	-
		1	-	-	✓
		2	-	✓	-
		3	-	✓	✓
		4	✓	-	-
		5	✓	-	✓
		6	✓	✓	-
		7	✓	✓	✓

WALTHER FLENDER®
ANTRIEBSTECHNIK

- For example, set F59 to 3 to make stall prevention active during Acceleration and constant run.

- When stall prevention is executed during acceleration or deceleration, Accel/Decel time may take longer than the user-setting time.

- When stall prevention is activated during constant run, t1, t2 executed in accordance with the value set in ACC - [Accel time] and dEC - [Decel time].

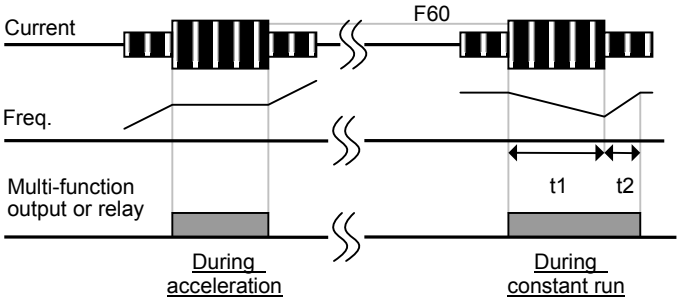

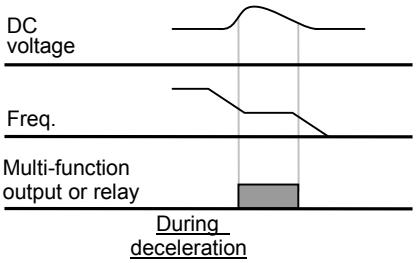

12.4 Output phase loss protection

Group	LED display	Parameter Name	Set value	Min/Max setting	Factory default	Unit
Function group 2	H19	[Output phase loss protection select]	1	0/1	0	

- Set H19 value to 1.
- This function turns off the inverter output in the event of more than one phase loss among U, V and W output.

☞ **Caution :**

Set H33- [Motor rated current] correctly. If the actual motor rated current and the value of H33 are different, this function could not be activated.

12.5 External trip signal

Group	LED display	Description	Set Value	Min/Max setting	Factory default	Unit
I/O group	I20	[Multi-function input terminal P1 define]		0/24	0	
	~	~				
	I23	[Multi-function input terminal P4 define]	18		3	
	I24	[Multi-function input terminal P5 define]	19		4	

- **<u>Select a terminal among P1 through P5 to output external trip signal.</u>**
- Set I23 and I24 to 18 and 19 to define P4 and P5 as External A contact and B contact.

▸ External trip signal input A contact (N.O) : This is a normally open contact input. When a P4 terminal set to “Ext trip-A” is ON, inverter displays the fault and turns off its output.

▸ External trip signal input B contact (N.C) : This is a normally closed contact input. When a terminal set to “Ext trip-B” is OFF, inverter displays the fault and turns off its output.

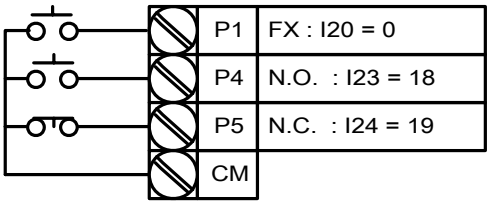

WALTHER FLENDER®
ANTRIEBSTECHNIK

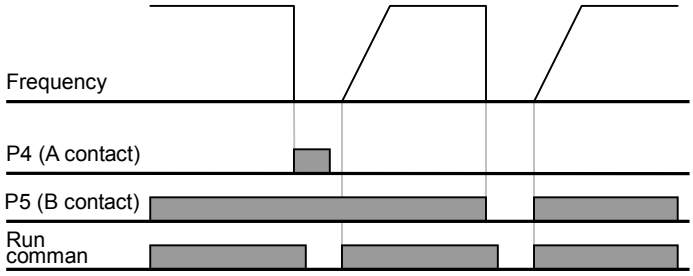

12.6 Inverter Overload

- Inverter overload prevention function is activated when the current above inverter rated current flows.
- Multi-function output terminal (MO) or Multi-function relay (30AC) is used as the alarm signal output during inverter overload trip.

Group	LED display	Parameter Name	Set value	Min/Max Range	Factory default	Unit
I/O group	I54	[Multi-function output terminal select]	7	0/17	12	
	I55	[Multi-function relay select]	7		17	

WALTHER FLENDER®
ANTRIEBSTECHNIK

12.7 Frequency command loss

Group	LED display	Parameter Name	Set value	Min/Max setting	Factory default	Unit
I/O group	I16	[Criteria for analog input signal loss]	0	0/2	0	
	I62	[Drive mode select after loss of frequency command]	-	0/2	0	
	I63	[Wait time after loss of frequency command]	-	1/12 0/17	1.0	Sec
	I54	[Multi-function output terminal select]	11		12	
	I55	[Multi-function relay select]	11		17	

- Select the Drive mode when frequency reference set via V1 and I or (V1+I) input terminal or communication option is lost.

I16 : This is to set the criteria for analog input signal loss when frequency reference is given by V1, I, V1+I or Communication option.

I16	[Criteria for analog input signal loss]	0	Disabled (Does not check the analog input signal loss)
		1	When less than the value set in I 2, I 7, I 12 is entered
		2	When below the value set in I 2, I 7, I 12 is entered

EX 1) The inverter determines that the freq reference is lost when DRV- Frq is set to 3 (Analog V1 input), I 16 to 1 and analog input signal is less than half of the minimum value set in I 7.

EX 2) The inverter determines that the freq reference is lost when DRV- Frq is set to 6 (V1+I), I 16 to 2 and V1 input signal is either below the minimum value set in I 7 or I input value is less than the I 12 value.

I62 : When no frequency command is given for the time set in I63, set the Drive mode as the table below.

I62	[Drive mode select after loss of frequency command]	0	Continuous operation with the frequency before command loss occurs
		1	Free run stop (output cut off)
		2	Decel to stop

I54, I55 : Multi-function output terminal (MO) or Multi-function relay output (30AC) is used to output information on loss of frequency command to external sequence.

For example, when I62 is set to 2, I63 to 5.0 sec and I54 to 11, respectively,

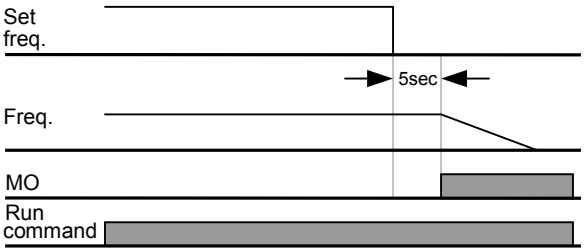

WALTHER FLENDER®
ANTRIEBSTECHNIK

13 Troubleshooting & Maintenance

13.1 Protective functions

⚠ WARNING

When a fault occurs, the cause must be corrected before the fault can be cleared. If protective function keeps active, it could lead to reduction in product life and damage to the equipment.

Fault Display and information

Keypad display	Protective functions	Descriptions
OCt	Overcurrent	The inverter turns off its output when the output current of the inverter flows more than 200% of the inverter rated current.
GFt	Ground fault current	The inverter turns off its output when a ground fault occurs and the ground fault current is more than the internal setting value of the inverter.
IOL	Inverter Overload	The inverter turns off its output when the output current of the inverter flows more than the rated level (150% for 1 minute).
OLt	Overload trip	The inverter turns off its output if the output current of the inverter flows at 150% of the inverter rated current for more than the current limit time (1 min).
OHt	Heat sink overheat	The inverter turns off its output if the heat sink overheats due to a damaged cooling fan or an alien substance in the cooling fan by detecting the temperature of the heat sink.
COL	DC link capacitor overload	The inverter turns off its output when it is time to replace the old DC link capacitor to a new one.
POt	Output Phase loss	The inverter turns off its output when the one or more of the output (U, V, W) phase is open. The inverter detects the output current to check the phase loss of the output.
Out	Over voltage	The inverter turns off its output if the DC voltage of the main circuit increases higher than 400 V when the motor decelerates. This fault can also occur due to a surge voltage generated at the power supply system.
Out	Low voltage	The inverter turns off its output if the DC voltage is below 200V because insufficient torque or overheating of the motor can occur when the input voltage of the inverter drops.
EtH	Electronic Thermal	The internal electronic thermal of the inverter determines the overheating of the motor. If the motor is overloaded the inverter turns off the output. The inverter cannot protect the motor when driving a motor having more than 4 poles or multi motors.

Keypad display	Protective functions	Descriptions
EEP	Parameter save error	This fault message is displayed when user-setting parameters fails to be entered into memory.
H/W	Inverter hardware fault	This fault message is displayed when an error occurs in the control circuitry of the inverter.
Err	Communication Error	This fault message is displayed when the inverter cannot communicate with the keypad.
FAn	Cooling fan fault	This fault message is displayed when a fault condition occurs in the inverter cooling fan.
EST	Instant cut off	Used for the emergency stop of the inverter. The inverter instantly turns off the output when the EST terminal is turned on. ☞ **Caution :** The inverter starts to regular operation when turning off the BX terminal while FX or RX terminal is ON.
EtA	External fault A contact input	When multi-function input terminal (I20-I24) is set to 18 {External fault signal input : A (Normal Open Contact)}, the inverter turns off the output.
Etb	External fault B contact input	When multi-function input terminal (I20-I24) is set to 18 {External fault signal input : B (Normal Close Contact)}, the inverter turns off the output..
_ _ L	Operating method when the frequency command is lost	When inverter operation is set via Analog input (0-10V or 0-20mA input) or option (RS485) and no signal is applied, operation is done according to the method set in I62 (Operating method when the frequency reference is lost).

13.2 Fault Remedy

Protective functions	Cause	Remedy
	☞ **Caution:** **When an overcurrent fault occurs, operation must be started after the cause is removed to avoid damage to IGBT inside the inverter.**	
OCt Overcurrent	● Accel/Decel time is too short compared to the GD^2 of the load. ● Load is greater than the inverter rating ● Inverter output is issued when the motor is free running. ● Output short circuit or ground fault has occurred. ● Mechanical brake of the motor is operating too fast.	☞ Increase the Accel/Decel time. ☞ Replace the inverter with appropriate capacity. ☞ Resume operation after stopping the motor or use H22 (Speed search) in Function group 2. ☞ Check output wiring. ☞ Check the mechanical brake.
GFt Ground fault current	● Ground fault has occurred at the output wiring of the inverter ● The insulation of the motor is damaged due to heat.	☞ Check the wiring of the output terminal. ☞ Replace the motor.
IOL Inverter overload OLt Overload trip	● Load is greater than the inverter rating. ● Inverter capacity is incorrectly selected. ● Torque boost scale is set too large.	☞ Upgrade the capacity of motor and inverter or reduce the load weight. ☞ Select correct inverter capacity. ☞ Reduce torque boost scale.
OHt Heat sink overheat	● Cooling system has faults. ● An old cooling fan is not replaced with a new one. ● Ambient temperature is too high.	☞ Check for alien substances clogged in the heat sink. ☞ Replace the old cooling fan with a new one. ☞ Keep ambient temperature under 40°C.
POt Output Phase loss	● Faulty contact of magnetic switch at output ● Faulty output wiring	☞ Make connection of magnetic switch at output of the inverter securely. ☞ Check output wiring.
FAn Cooling fan fault	● An alien substance is clogged in a ventilating slot. ● Inverter has been in use without changing a cooling fan.	☞ Check the ventilating slot and remove the clogged substances. ☞ Replace the cooling fan.
Out Over voltage	● Decel time is too short compared to the GD^2 of the load. ● Regenerative load is at the inverter output. ● Line voltage is too high.	☞ Increase the Decel time. ☞ Use Dynamic Brake Unit. ☞ Check whether line voltage exceeds its rating.
Lut Low voltage	● Line voltage is low. ● Load larger than line capacity is connected to line (ex: welding machine, motor with high starting current connected to the commercial line). ● Faulty magnetic switch at the input side of the inverter.	☞ Check whether line voltage is below its rating. ☞ Check the incoming AC line. Adjust the line capacity corresponding to the load. ☞ Change a magnetic switch.
EtH Electronic thermal	● Motor has overheated. ● Load is greater than inverter rating. ● ETH level is set too low. ● Inverter capacity is incorrectly selected. ● Inverter has been operated at low speed for too long.	☞ Reduce load weight and operating duty. ☞ Change inverter with higher capacity. ☞ Adjust ETH level to an appropriate level. ☞ Select correct inverter capacity. ☞ Install a cooling fan with a separate power supply.

WALTHER FLENDER®
ANTRIEBSTECHNIK

Protective functions	Cause	Remedy
EtA External fault A contact input Etb External fault B contact input	● The terminal which is set to “18 (External fault-A)” or “19 (External fault-B)” in I20-I24 in I/O group is ON.	☞ Eliminate the cause of fault at circuit connected to external fault terminal or cause of external fault input.
_ _ L Operating method when the frequency command is lost	● No frequency command is applied to V1 and I.	☞ Check the wiring of V1 and I and frequency reference level.
EEP Parameter save error H'E Hardware fault Err Communication Error		☞ Contact your local Walther Flender sales representative.

13.3 Precautions for maintenance and inspection

⚠ CAUTION

Make sure to remove the input power while performing maintenance.
Make sure to perform maintenance after checking the DC link capacitor has discharged. The bus capacitors in the inverter main circuit can still be charged even after the power is turned off. Check the voltage between terminal P or P1 and N using a tester before proceeding.
SERIES N series inverter has ESD (Electrostatic Discharge) sensitive components. Take protective measures against ESD before touching them for inspection or installation.
Do not change any inner parts and connectors. Never modify the inverter.

13.4 Check points

- Daily inspections
  - ✓ Proper installation environment
  - ✓ Cooling system fault
  - ✓ Unusual vibration and noise
  - ✓ Unusual overheating and discoloration
- Periodic inspection
  - ✓ Screws and bolts may become loose due to vibration, temperature changes, etc.
    - ☞ Check that they are tightened securely and retighten as necessary.
  - ✓ Alien substances are clogged in the cooling system.
    - ☞ Clean it using the air.
  - ✓ Check the rotating condition of the cooling fan, the condition of capacitors and the connections with the magnetic contactor.
    - ☞ Replace them if there are any abnormalities.

13.5 Part replacements

The inverter consists of many electronic parts such as semiconductor devices. The following parts may deteriorate with age because of their structures or physical characteristics, leading to reduced performance or failure of the inverter. For preventive maintenance, the parts must be changed periodically. The parts replacement guidelines are indicated in the following table. Lamps and other short-life parts must also be changed during periodic inspection.

Part name	Change period (unit: Year)	Description
Cooling fan	3	Exchange (as required)
Smoothing capacitor in main circuit	4	Exchange (as required)
Smoothing capacitor on control board	4	Exchange (as required)
Relays	-	Exchange (as required)

Notes:

14 Specifications

14.1 Technical data

- Input & output ratings

Mod.: SERIES N 2S____X_K2		0001	0002	0003	0005
Max motor capacity[1]	[HP]	0.5	1.5	2.5	4
	[kW]	0.4	1.1	1.8	3.0
Output ratings	Capacity [kVA][2]	0.95	1.9	3.0	4.5
	FLA [A]	2.5	5	8	12
	Frequency	0 ~ 400 [Hz][3]			
	Voltage	Three Phase 200 ~ 230V[4]			
Input ratings	Voltage	Single Phase 200 ~ 230V (±10%)			
	Frequency	50 ~ 60 [Hz] (±5%)			
	Current	5.5	9.2	16	21.6

- Control

Control mode	V/F control, Sensorless vector control
Frequency setting resolution	Digital: 0.01Hz Analog: 0.06Hz (Max. frequency : 60Hz)
Accuracy of Frequency command	Digital: 0.01% of Max. output frequency Analog: 0.1% of Max. output frequency
V/F Ratio	Linear, Squared Pattern, User V/F
Overload capacity	Software: 150% for 60 s, Hardware: 200% for 30 s (time-inverse)
Torque boost	Auto/Manual torque boost

- Operation

Operation mode		Keypad/ Terminal/ Communication option selectable	
Frequency setting		Analog: 0 ~ 10[V], 0 ~ 20[mA], Keypad Potentiometer Digital : Keypad	
Operation features		PID control, Up-Down operation, 3-wire operation	
Input	Multi-function terminal	NPN/ PNP selectable Function: (refer to page 3-5)	
Output	Multi-function open collector terminal	Operating status	Function: (Refer to page 11-6)
	Multi-function relay terminal	Fault output (N.O., N.C.)	
	Analog output	0 ~ 10 Vdc : Frequency, Current, Voltage, DC link voltage selectable	

[1] Indicates the maximum applicable motor capacity when using a 4-pole WALTHER FLENDER Standard Motor.
[2] Rated capacity is based on 220V.
[3] Max settable freq is 300Hz when H30 is set to 3 “Sensorless Vector Control”.
[4] Max output voltage will not be greater than the input voltage. Output voltage less than the input voltage can be programmed.

- Protective functions

Inverter Trip	Over-voltage, Under-voltage, Over-current, Ground fault current detection, Over-temperature of inverter and motor, Output phase open, Overload, Communication error, Loss of frequency command, H/W fault
Alarm Conditions	Stall prevention, Overload
Momentary power loss	Less than 15 mSec. : Continuous operation More than 15 mSec. : Auto Restart enable

- Environment

Cooling method	Forced air cooling
Degree of protection	Open, IP 20
Ambient temperature	-10°C ~ +50°C
Storage temperature	-20°C ~ +65°C
Relative humidity	Less than 90% (no condensation)
Altitude, Vibration	1,000m above sea level, Max. 5.9m/sec^2 (0.6G)
Application site	Protected from corrosive gas, combustible gas, oil mist or dust

14.2 Temperature Derating Information

Load current VS Carrier frequency

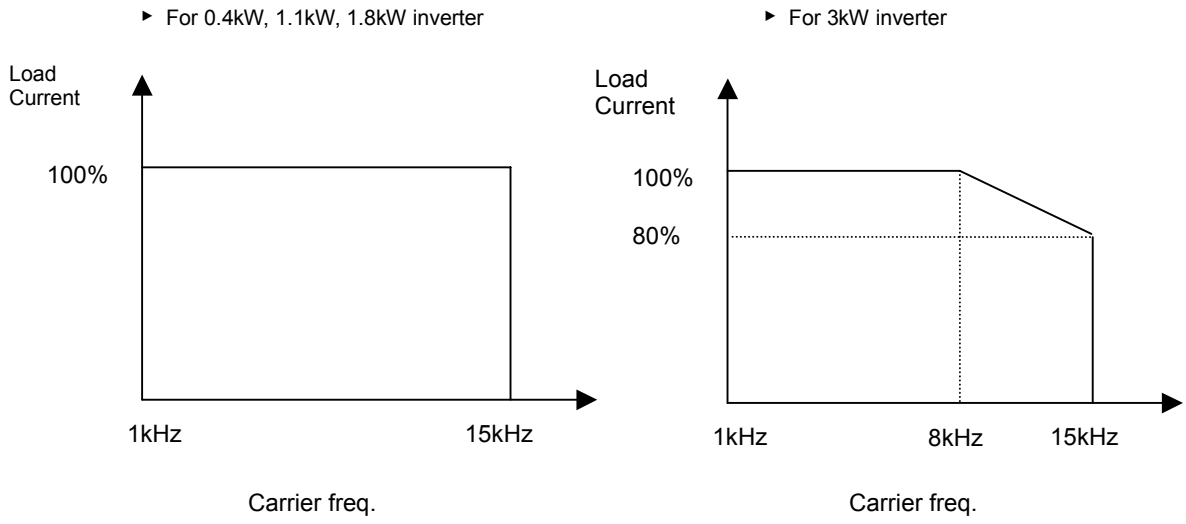

☞ Note :

1. The above graph is applied when inverter is in use within the permissible ambient temp. If the unit is installed in a panel, install it where heat dissipation is properly done to keep the panel ambient temp within permissible range.
2. This derating curve is based on inverter current rating when rated motor is connected.

WALTHER FLENDER®
ANTRIEBSTECHNIK

NOTES:

MODBUS-RTU
SERIES N

Thank you for purchase of Walther Flender Antriebstechnik GmbH Modbus-RTU Option Board!

SAFETY PRECAUTIONS

- Always follow safety precautions to prevent accidents and potential hazards from occurring.
- Safety precautions are classified into “WARNING” and “CAUTION” in this manual.

⚠ **WARNING**	Indicates a potentially hazardous situation which, if not avoided, can result in serious injury or death.
⚠ **CAUTION**	Indicates a potentially hazardous situation which, if not avoided, can result in minor to moderate injury, or serious damage to the product.

- Throughout this manual we use the following two illustrations to make you aware of safety considerations:

⚠ Identifies potential hazards.
Read the message and follow the instructions carefully.

Identifies shock hazards.
Particular attention should be directed because dangerous voltage may be present.

- Keep this manual at handy for quick reference.

⚠ CAUTION

- **Do not touch the CMOS components unless the board is grounded.**
  ESD can cause break down of CMOS components.
- **Do not change the communication cable with the inverter power is turned on.**
  Otherwise, there is a danger of connecting error and damage to the board.
- **Make sure to precisely insert the connector of inverter and option board**
  Otherwise, there is a danger of connecting error and damage to the board.
- **Check the parameter unit when setting the parameters.**
  Otherwise, there is a danger of connecting error and damage to the board.

1. Introduction

By using a MODBUS-RTU Option board, SERIES N inverter can be connected to a MODBUS-RTU network.

Easy use of inverter operation, monitoring by User program and Parameter change and monitoring are available using PC.

1.1 Interfacing type of RTU Reference

- Allows the drive to communicate with any makers' computers.
- Allows connection of up to 16 drives by multi-drop link system.
- Ensure noise-resistant interface.

Users can use any kind of RS232-485 converters. However a converter that has built-in 'automatic RTS control' is highly recommended. The specifications of converters depend on the manufacturers. Refer to the converter manual for detailed converter specifications.

1.2 Before Installation

Before installation and operation, this manual should be read thoroughly. If not, it can cause personal injury or damage other equipment.

2. Specification

2.1 Performance specification

Items	Specifications
Communication method	RS485 (RS232-485 converter
Transmission form	Bus method, Multidrop Link System
Applicable inverter	SERIES N series
Converter	RS232-485, Use PC with RS232 card embedded
Number of inverters	Maximum 31 drives connectable
Transmission distance	Max. 1200m (Less than 700 m recommended)

2.2 Hardware Specifications

Items		Specifications
Installation		Option connector on the inverter control board
Power Supply	Control B/D	From inverter power supply
	Comm. B/D	From inverter power supply

2.3 Communication Specification

Items	Specifications
Communication speed	19200/9600/4800/2400/1200 bps Selectable
Control procedure	Asynchronous communication system
Communication system	Half duplex system
Character system	Binary (8 bit)
Start/Stop bit	1 bit
Error check(CRC16)	2 byte
Parity check	None

3. Product Detail

3.1 Layout and detail

Name	Description		
Connector	Connector to inverter main PCB		
Signal connection terminal	Communication signal connection terminal	P	485 signal - high
		N	485 signal – low
		G	485 Ground

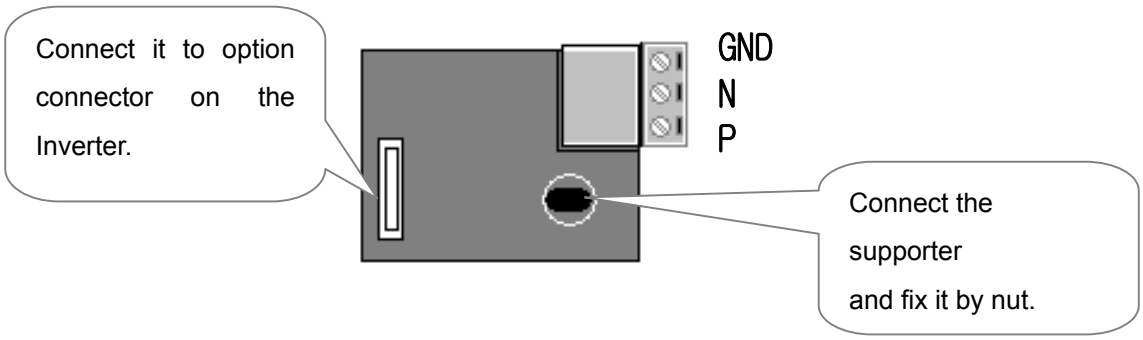

Figure 3. Layout of comm. terminal

Pin #	GND	N	P
Description	Ground	Signal	

GND: Ground for RS 485 terminal

4. Installation

4.1 Installation of Comm. board

① Connect the option board to the inverter control board using each connector on the board (See the Figure 2). Check for the position of supporter. Incorrect installation results in faulty connection of option card.

② Double check the board is firmly installed to the board and then apply the inverter power.

③ When card installation and parameter setting are finished, turn the power off to connect the converter.

④ Connect the jumper for terminating resistor when option card is connected at the end of network. (see figure 3).

⑤ When ①~④ is done correctly, set the parameters for communication according to the below table.

Parameter code	Display	Setting Value
< I – 60 >	Inverter number	1~16
< I – 61 >	Baud-rate	1200~19200 [bps]
< I – 62 >	Lost command	0~2
< I – 63 >	TimeOut (Note 1)	0.1 sec (Factory default)

Note 1) It is used for Emergency Stop when communication between inverter and master is not done properly. It is activated when communication is not made even once for the set time. It means remote controlling of inverter is not done. Set this value for safety.

⑥ Turn off the inverter power before the connection of the Converter when parameter setting is finished.

4.2 Installation of communication board

① Follow the steps below for models SERIES N 2S0001~2S0002

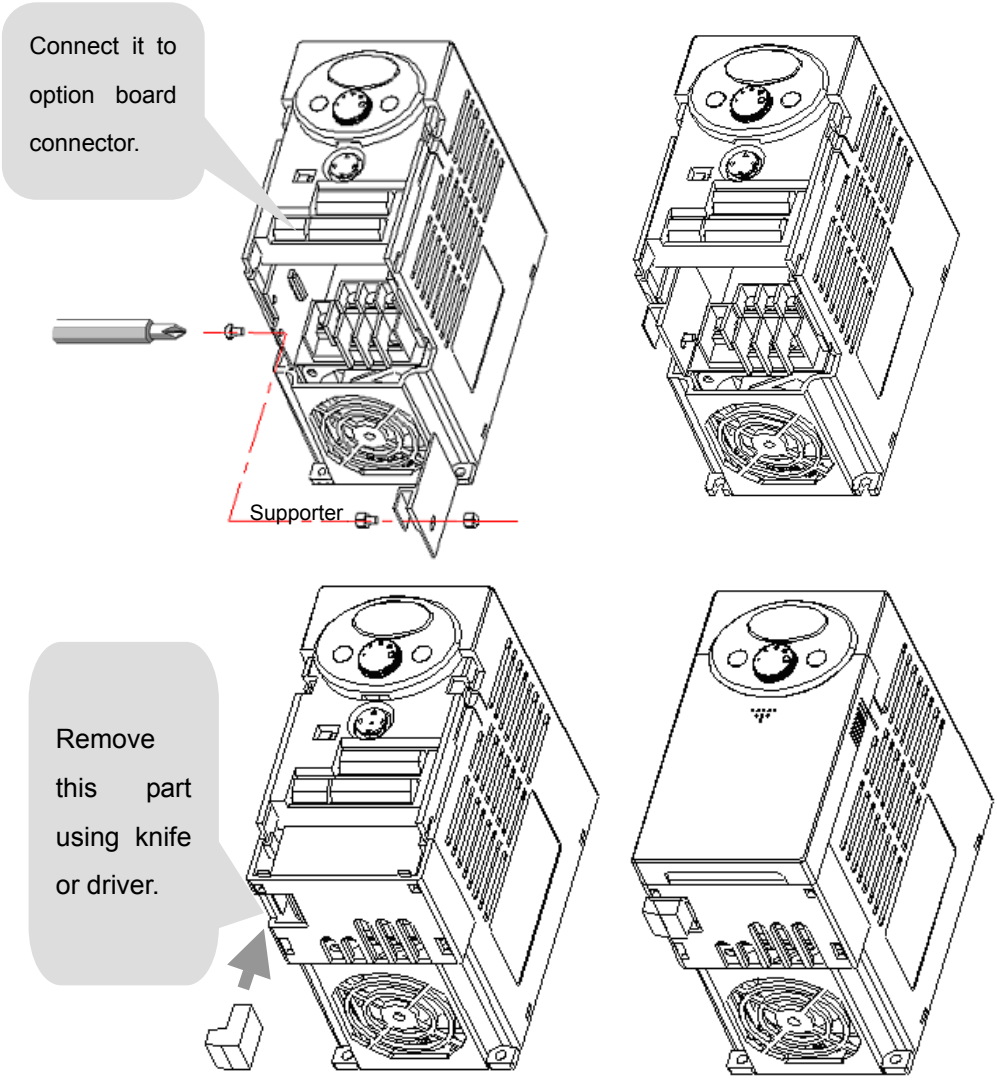

Figure 2. ModBus-RTU card installation

Fix the supporter using nut.

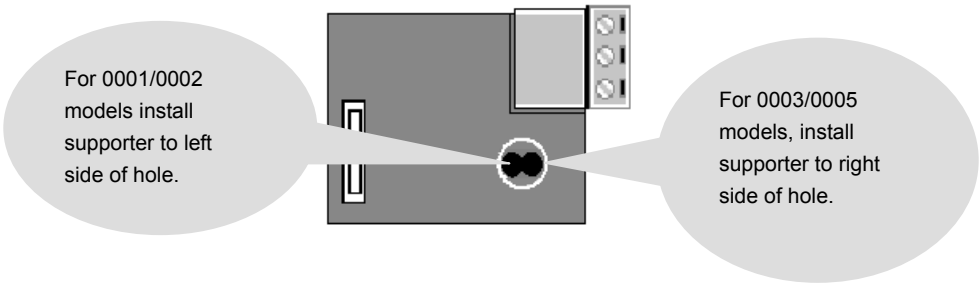

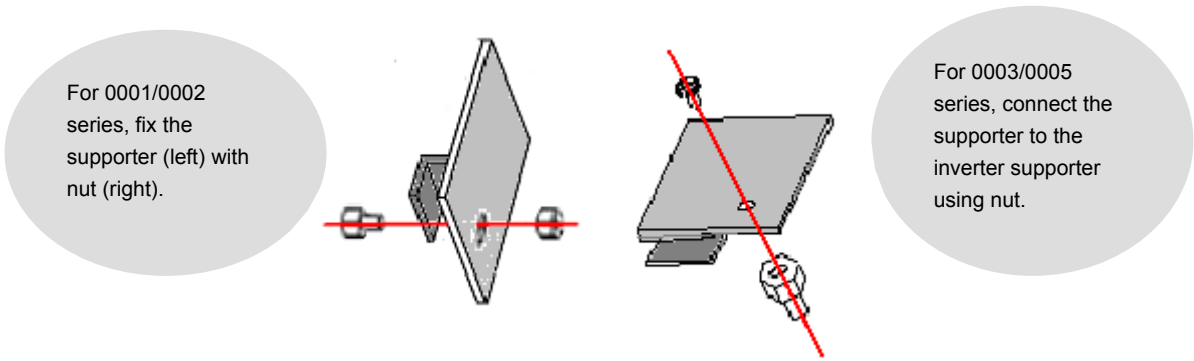

There are two holes on the option board for connection of option and inverter. Use left hole for models SERIES N 0001/0002 and right for models SERIES N 0003/0005 series.

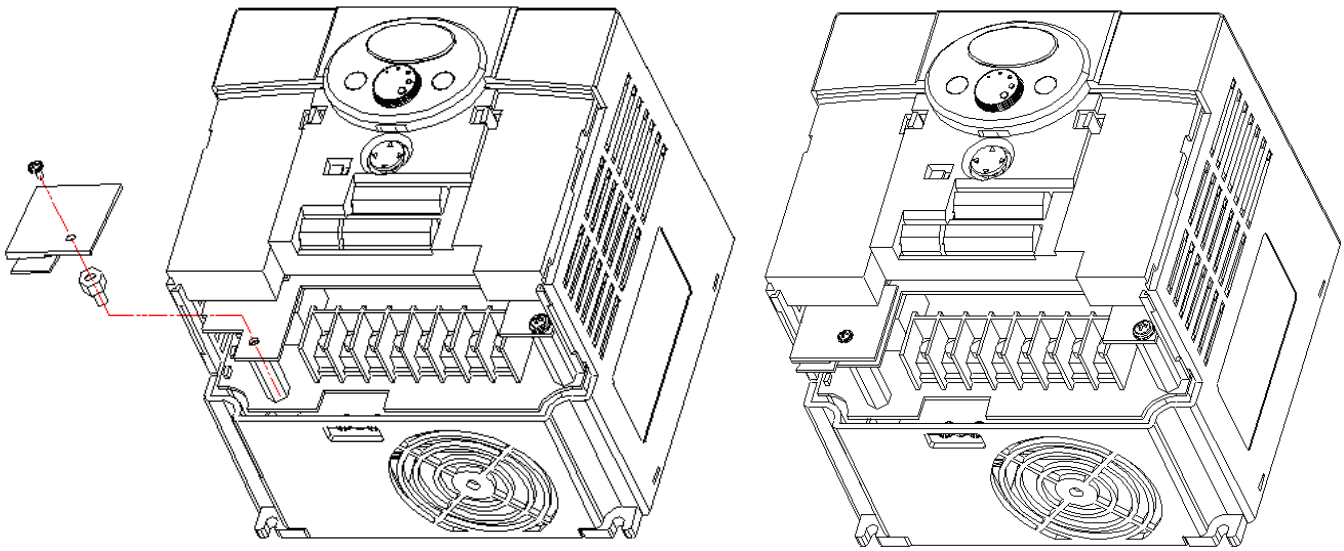

For models SERIES N 0003/0005 as shown above, loosen the bolt on the connector for Comm. Option and tighten it onto the supporter on the inverter case. Before fixing the option board, bottom cover plastic part for Comm. Option should be removed using knife or driver. The same method is used as 0001/0002 installation.

Connect the option board to inverter and reapply the bottom cover before tightening the supporter.

Follow the opposite order when dissembling.

4.3 Installing RS232-485 converter

Installing method is different from makers. Refer to converter manual for installation.

4.4 Computer, Converter and Option board connection

4.4.1 System configuration

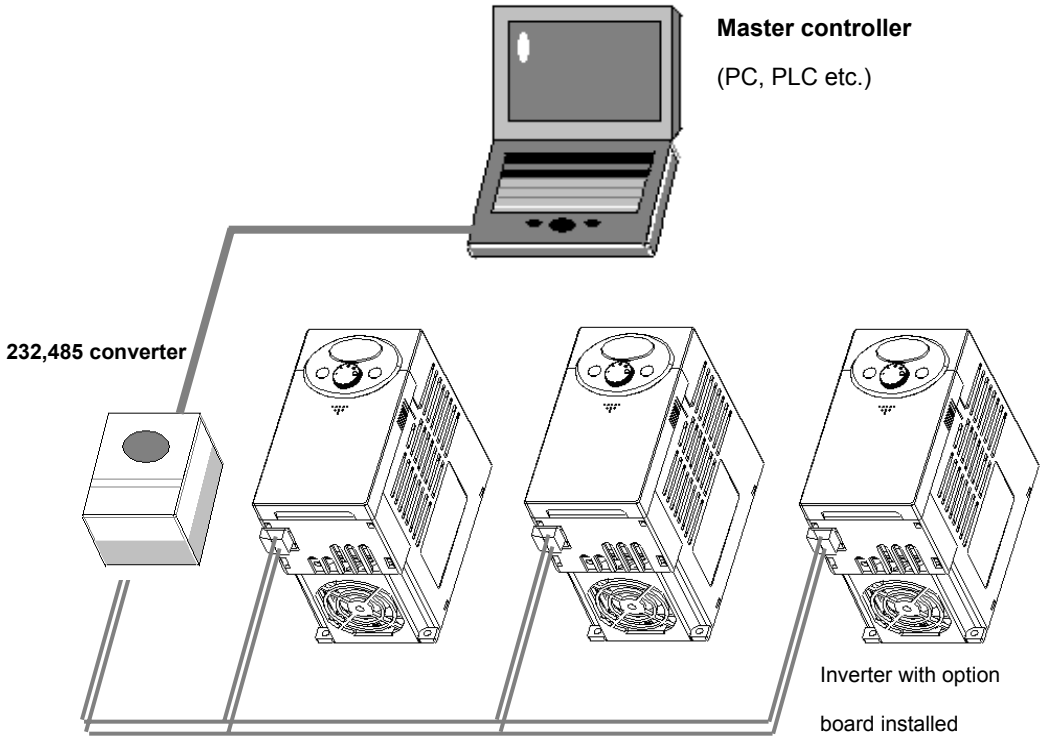

Figure 2. System configuration

Max connectable inverters: 16

Extention Line Length: Max 1200m (Less than 700m recommended)

5. Communication protocol

① Use the ModBus-RTU protocol (Open).

Computer or other hosts are a Master with inverter Slaves. Inverter responds to the Read/Write request by Master.

5.1 Supported Function Code

Function Code	Name
0x03	Read Hold Register
0x04	Read Input Register
0x06	Preset Single Register
0x10	Preset Multiple Register

5.2 Exception Code

Exception Code		Name
0x01		ILLEGAL FUNCTION
0x02		ILLEGAL DATA ADDRESS
0x03		ILLEGAL DATA VALUE
0x06		SLAVE DEVICE BUSY
User define	0x14	1. Write Disable (Address 0x0004 value is 0) 2. Read Only or Not Program during Running.

5.3 BaudRate

1200, 2400, 4800, 9600, 19200bps settable (default: 9600bps)

6. Troubleshooting

6.1 Communication is not established

Checking point	Diagnosis
Is input power applied to converter?	Apply power to the converter.
Is the wiring of converter and PC correct?	Refer to converter manual.
Is Option card connection to the inverter incorrect?	Refer to “4. Installation”.
Is Master not polling?	Verify that the Master is polling the inverter.
Is baud rage set correctly?	Refer to “4. Installation”.
Is Data format of User program correct?	Revise User program (Note 2).
Is the wiring of converter and option board correct?	Refer to “4. Installation”.

Note 2) User program is User-made S/W for PC.

Parameter Code (Hex)

< Common area > Area accessible regardless of inverter models (Note 3)

◆ Common area

Address	Parameter	Scale	Unit	R/W	Description
0x0000	Inverter model			R	7 : VEGA DRIVE 8 : SERIES N
0x0001	Inverter capacity			R	0: 0.75kW, 1: 1.5kW, 2: 2.2kW -1: 0.4kW (indicated as 65535)
0x0002	Inverter input power			R	0 : 220V 1 : 440V

◆ Common area

Address	Parameter	Scale	Unit	R/W	Description
0x0003	S/W Version			R	(Ex) 0x0100 : Version 1.00 0x0101 : Version 1.01
0x0004	Parameter Read/Write enable			R/W	0: Parameter Lock 1: Parameter Read/Write Enable
0x0005	Frequency Reference	0.01	Hz	R/W	Starting freq ~ Max freq
0x0006	Operatin command (Option)			R/W	BIT 0 : Stop (S) BIT 1 : Forward Run (F) BIT 2 : Reverse Run (R) BIT 3 : Fault reset (0->1) BIT 4 : Emergency stop BIT 5 : Not used
0x0007	Accel time	0.1	sec	R/W	See function table
0x0008	Decel time	0.1	sec	R/W	See function table
0x0009	Output current	0.1	A	R	See function table
0x000A	Output frequency	0.01	Hz	R	See function table
0x000B	Output voltage	0.1	V	R	See function table
0x000C	DC Link Voltage	0.1	V	R	See function table
0x000D	Output power	0.1	kW	R	See function table
0x000E	Status of Inverter			R	BIT 0 : Stop BIT 1 : Forward running BIT 2 : Reverse running BIT 3 : Fault (Trip) BIT 4 : Accelerating BIT 5 : Decelerating BIT 6 : Speed arrival BIT 7 : DC Braking BIT 8 : Stopping Bit 9 : Not Used BIT 10 : Brake Open (I55: 3 or 4) BIT13: REM. R/S BIT14: REM. Freq.
0x000F	Trip information			R	BIT 0 : OCT BIT 1 : OV BIT 2 : EXT-A BIT 3 : EST BIT 4 : Option BIT 5 : GF(Ground Fault) BIT 6 : OH(Inverter overheat) BIT 7 : ETH(Motor overheat) BIT 8 : OLT(Overload trip) BIT 9 : HW-Diag BIT10: EXT-B BIT11: EEP

◆ Common area

Address	Parameter	Scale	Unit	R/W	Description
					BIT12: FAN BIT13: PO(Phase Open) BIT14 : IOLT BIT15: LV
0x0010	Input terminal information			R	BIT 0 : P1(FX) BIT 1 : P2(RX) BIT 2 : P3(EST) BIT 3 : P4(RST) BIT 4 : P5(JOG)
0x0011	output terminal information			R	BIT 0 : Q1 (OC1) BIT 1 : 30AC
0x0012	V1	0~10V		R	0 - 0xFFC0
0x0013	V2	0~10V		R	0 - 0xFFC0
0x0014	I	0~20mA		R	0 - 0xFFC0
0x0015	RPM			R	See function table

Note 3) The changed value in Common affects the current setting but returns to the previous setting when power is cycled or inverter is reset. However, changing value is immediately reflected in other parameter groups even in the case of Reset or Power On/Off.

Note 4) S/W version in Common area is indicated in 16 bit with parameter area in 10 bit.

◆ **DRV group**

Address		Code	Description	Factory default	Max	Min
16 Bit	10 Bit					
8100	33024	D00	Cmd. freq	0	maxFreq	0
8101	33025	D01	ACC	50	60000	0
8102	33026	D02	DEC	100	60000	0
8103	33027	D03	DRV	1	3	0
8104	33028	D04	FRQ	0	8	0
8105	33029	D05	ST 1	1000	maxFreq	0
8106	33030	D06	ST 2	2000	maxFreq	0
8107	33031	D07	ST 3	3000	maxFreq	0
8108	33032	D08	CUR	0	1	0
8109	33033	D09	RPM	0	1800	0
810A	33034	D10	DCL	0	65535	0
810B	33035	D11	USR	0	1	0
810C	33036	D12	FLT	0	1	0
810D	33037	D13	DRC	0	1	0

◆ **F group**

Address		Code	Description	Factory default	Max	MinBit
16 Bit	10 Bit					
8201	33281	F1	Run Prohibit	0	2	0
8202	33282	F2	ACC Pattern	0	1	0
8203	33283	F3	DEC Pattern	0	1	0
8204	33284	F4	Stop Method	0	2	0
8208	33288	F8	DcBr freq	500	6000	startFreq
8209	33289	F9	DcBlk time	10	6000	0
820A	33290	F10	DcBr value	50	200	0
820B	33291	F11	DcBr time	10	600	0
820C	33292	F12	DcSt value	50	200	0
820D	33293	F13	DcSt time	0	600	0
820E	33294	F14	PreExTime	10	600	0
8214	33300	F20	Jog Freq	1000	maxFreq	0
8215	33301	F21	Max Freq	6000	Freq Limit High	4000
8216	33302	F22	Base Freq	6000	Freq Limit High	3000
8217	33303	F23	Start Freq	50	1000	0
8218	33304	F24	Freq Limit	0	1	0
8219	33305	F25	High Freq	6000	maxFreq	0
821A	33306	F26	Low Freq	50	maxFreq	startFreq
821B	33307	F27	Trq Boost	0	1	0
821C	33308	F28	Fwd Boost	50	150	0
821D	33309	F29	Rev Boost	50	150	0
821E	33310	F30	VF Pattern	0	2	0
821F	33311	F31	User Freq1	1500	maxFreq	0
8220	33312	F32	User Volt 1	25	100	0
8221	33313	F33	User Freq 2	3000	maxFreq	0
8222	33314	F34	User Volt 2	50	100	0
8223	33315	F35	User Freq 3	4500	maxFreq	0
8224	33316	F36	User Volt 3	75	100	0
8225	33317	F37	User Freq 4	6000	maxFreq	0
8226	33318	F38	User Volt 4	100	100	0
8227	33319	F39	Volt Perc	1000	1100	400
8228	33320	F40	Energy save	0	30	0
8232	33330	F50	ETH select	0	1	0
8233	33331	F51	ETH 1min	150	200	F52
8234	33332	F52	ETH cont	100	F51	50
8235	33333	F53	Motor type	0	1	0
8236	33334	F54	OL level	150	150	30
8237	33335	F55	OL time	100	300	0
8238	33336	F56	OLT select	1	1	0
8239	33337	F57	OLT level	180	200	30
823A	33338	F58	OLT time	600	600	0
823B	33339	F59	Stall prev.	0	7	0
823C	33340	F60	Stall level	150	150	30

◆ **H group**

Address		Code	Description	Factory default	Max	Min
16 Bit	10 Bit					
8301	33537	H1	Last Fault1	0	1	0
8302	33538	H2	Last Fault2	0	1	0
8303	33539	H3	Last Fault3	0	1	0
8304	33540	H4	Last Fault4	0	1	0
8305	33541	H5	Last Fault5	0	1	0
8306	33542	H6	Fault Clear	0	1	0
8307	33543	H7	Dwell freq	500	maxFreq	startFreq
8308	33544	H8	Dwell time	0	100	0
830A	33546	H10	Jump freq	0	1	0
830B	33547	H11	jump lo 1	1000	jumpHiFreq	startFreq
830C	33548	H12	jump Hi 1	1500	maxFreq	jumpLoFreq
830D	33549	H13	jump lo 2	2000	jumpHiFreq	startFreq
830E	33550	H14	jump Hi 2	2500	maxFreq	jumpLoFreq
830F	33551	H15	jump lo 3	3000	jumpHiFreq	startFreq
8310	33552	H16	jump Hi 3	3500	maxFreq	jumpLoFreq
8311	33553	H17	Curve Time	40	100	1
8312	33554	H18	Curve Time1	40	100	1
8313	33555	H19	Trip select	0	1	0
8314	33556	H20	Power-on run	0	1	0
8315	33557	H21	RST restart	0	1	0
8316	33558	H22	Speed Search	0	15	0
8317	33559	H23	SS Sup-Curr	100	200	80
8318	33560	H24	SS P-gain	100	9999	0
8319	33561	H25	SS I-gain	1000	9999	0
831A	33562	H26	Retry number	0	10	0
831B	33563	H27	Retry delay	10	600	0
831E	33566	H30	Motor select	0	4	0
831F	33567	H31	Pole number	4	12	2
8320	33568	H32	Rated-Slip	200	1000	0
8321	33569	H33	Rated-Curr	18	2000	10
8322	33570	H34	Noload-Curr	7	200	1
8324	33572	H36	Efficiency	72	100	70
8325	33573	H37	Inertia rate	0	2	0
8327	33575	H39	Carrier freq	30	150	10
8328	33576	H40	Control Mode	0	3	0
8329	33577	H41	Auto Tune	0	1	0
832A	33578	H42	Rs	2500	5000	0
832C	33580	H44	Lsigma	2600	30000	0
832D	33581	H45	SL P-Gain	1000	32767	0
832E	33582	H46	SL I-Gain	100	32767	0
8332	33586	H50	PID F/B	0	1	0
8333	33587	H51	PID P-gain	3000	9999	0
8334	33588	H52	PID I-time	100	3200	10
8335	33589	H53	PID D-time	0	3000	0
8336	33590	H54	PID F-gain	0	9999	0

◆ **H group**

Address		Code	Description	Factory default	Max	Min
16 Bit	10 Bit					
8337	33591	H55	PID limit	6000	maxFreq	startFreq
8346	33606	H70	Acc/Dec freq	0	1	0
8347	33607	H71	Xcel T Mode	1	2	0
8348	33608	H72	PowerOn disp	0	13	0
8349	33609	H73	User disp	0	2	0
834A	33610	H74	RPM factor	100	1000	1
834F	33615	H79	S/W Version	Refer to Product manual	100	0
8351	33617	H81	2nd Acc time	50	60000	0
8352	33618	H82	2nd Dec time	100	60000	0
8353	33619	H83	2nd BaseFreq	6000	maxFreq	3000
8354	33620	H84	2nd V/F	0	2	0
8355	33621	H85	2nd F-boost	50	150	0
8356	33622	H86	2nd R-boost	50	150	0
8357	33623	H87	2nd Stall	150	150	30
8358	33624	H88	2nd ETH 1min	150	200	50
8359	33625	H89	2nd ETH cont	100	200	50
835A	33626	H90	2nd R-Curr	18	200	1
835D	33629	H93	Para Init	0	5	0
835E	33630	H94	Password set	0	4095	0

◆ **I group**

Address		Code	Description	Factory default	Max	Min
16 Bit	10 Bit					
8401	33793	I1	VR filter	10	9999	0
8402	33794	I2	VR volt x1	0	viXmax	0
8403	33795	I3	VR freq y1	0	maxFreq	0
8404	33796	I4	VR volt x2	1000	1000	viXmin
8405	33797	I5	VR freq y2	6000	maxFreq	0
8406	33798	I6	V1 filter	10	9999	0
8407	33799	I7	V1 volt x1	0	viXmax	0
8408	33800	I8	V1 freq y1	0	maxFreq	0
8409	33801	I9	V1 volt x2	1000	1000	viXmin
840A	33802	I10	V1 freq y2	6000	maxFreq	0
840B	33803	I11	I filter	10	9999	0
840C	33804	I12	I curr x1	400	viXmax	0
840D	33805	I13	I freq y1	0	maxFreq	0
840E	33806	I14	I curr x2	2000	2000	viXmin
840F	33807	I15	I freq y2	6000	maxFreq	0
8410	33808	I16	Wire broken	0	2	0
8414	33812	I20	P1 define	0	24	0
8415	33813	I21	P2 define	1	24	0
8416	33814	I22	P3 define	2	24	0
8417	33815	I23	P4 define	3	24	0
8418	33816	I24	P5 define	4	24	0
841B	33819	I27	Ti Filt Num	15	50	2

◆ I group

Address		Code	Description	Factory default	Max	Min
16 Bit	10 Bit					
841E	33822	I30	ST 4	3000	maxFreq	0
841F	33823	I31	ST 5	2500	maxFreq	0
8420	33824	I32	ST 6	2000	maxFreq	0
8421	33825	I33	ST 7	1500	maxFreq	0
8422	33826	I34	Acc Time-1	30	60000	0
8423	33827	I35	Dec Time-1	30	60000	0
8424	33828	I36	Acc Time-2	40	60000	0
8425	33829	I37	Dec Time-2	40	60000	0
8426	33830	I38	Acc Time-3	50	60000	0
8427	33831	I39	Dec Time-3	50	60000	0
8428	33832	I40	Acc Time-4	60	60000	0
8429	33833	I41	Dec Time-4	60	60000	0
842A	33834	I42	Acc Time-5	70	60000	0
842B	33835	I43	Dec Time-5	70	60000	0
842C	33836	I44	Acc Time-6	80	60000	0
842D	33837	I45	Dec Time-6	80	60000	0
842E	33838	I46	Acc Time-7	90	60000	0
842F	33839	I47	Dec Time-7	90	60000	0
8432	33842	I50	FM mode	0	3	0
8433	33843	I51	FM adjust	100	200	10
8434	33844	I52	FDT freq	3000	maxFreq	0
8435	33845	I53	FDT band	1000	maxFreq	0
8436	33846	I54	Aux mode 1	12	17	0
8437	33847	I55	Aux mode 2	17	17	0
8438	33848	I56	Relay mode	2	7	0
843C	33852	I60	Inv No.	1	16	1
843D	33853	I61	Baud rate	3	4	0
843E	33854	I62	Lost command	0	2	0
843F	33855	I63	Time out	10	120	1